Overview

The KEMET ETG radial aluminum electrolytic capacitors are designed for long life (5,000 hours) and high reliability applications requiring a slim pen solution.

Applications

Typical applications include LED TV, electronic ballast, power supplies, and long-life equipment.

Benefits

- Suited for long life, high reliability applications
- Operating temperature of up to 105°C
- 5,000 hour operating life
- High ripple current
- Safety vent on the capacitor base

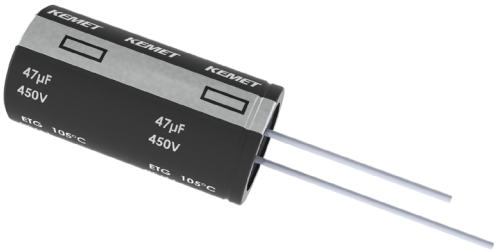

Part Number System

ETG	226	M	250		A	K6	AA
Series	Capacitance Code (pF)	Tolerance	Rated Voltage (VDC)		Electrical Parameters	Size Code	Packaging
Radial Aluminum Electrolytic	First two digits represent significant figures for capacitance values. Last digit specifies the number of zeros to be added.	M = ±20%	016 = 16 025 = 25 035 = 35 050 = 50 063 = 63 100 = 100 160 = 160	200 = 200 250 = 250 350 = 350 400 = 400 420 = 420 450 = 450	A = Standard	See Dimension Table	See Ordering Options Table

Ordering Options Table

Diameter	Packaging Type	Lead Type	Lead Length (mm)	Lead and Packaging Code
Standard Bulk Packaging Options				
4 – 22	Bulk (bag)	Straight	20/15 Minimum	AA
Standard Auto-Insertion Packaging Options				
10 – 13	Ammo	5 mm lead spacing	H_0 = 18.5±0.75	EA
16 – 18	Ammo	7.5 mm lead spacing	H_0 = 18.5±0.75	EA
Other Packaging Options				
4 – 8	Ammo	Formed to 5 mm	H_0 = 16±0.75	DA
4 – 8	Ammo	Straight	H_0 = 18.5±0.75	EA
4 – 5	Ammo	Formed to 2.5 mm	H_0 = 16±0.75	FA
Contact KEMET for other lead and packaging options				

Environmental Compliance

As an environmentally conscious company, KEMET is working continuously with improvements concerning the environmental effects of both our capacitors and their production. In Europe (RoHS Directive) and in some other geographical areas like China, legislation has been put in place to prevent the use of some hazardous materials, such as lead (Pb), in electronic equipment. All products in this catalog are produced to help our customers' obligations to guarantee their products and fulfill these legislative requirements. The only material of concern in our products has been lead (Pb), which has been removed from all designs to fulfill the requirement of containing less than 0.1% of lead in any homogeneous material. KEMET will closely follow any changes in legislation world wide and make any necessary changes in its products, whenever needed.

Some customer segments such as medical, military and automotive electronics may still require the use of lead in electrode coatings. To clarify the situation and distinguish products from each other, a special symbol is used on the packaging labels for RoHS compatible capacitors.

Due to customer requirements, there may appear additional markings such as lead free (LF) or lead-free wires (LFW) on the label.

Dimensions – Millimeters

SIDE VIEW

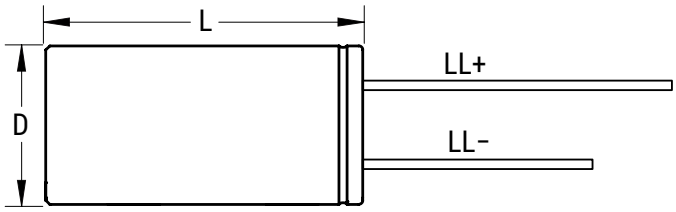

TERMINAL END VIEW

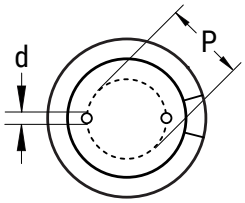

Size Code	D		L		P		d		LL+/LL-
	Nominal	Tolerance	Nominal	Tolerance	Nominal	Tolerance	Nominal	Tolerance	Minimum
GA	8.0	±0.5	30	±2.0	3.5	±0.5	0.6	Nominal	20/15
GB	8.0	±0.5	32	±2.0	3.5	±0.5	0.6	Nominal	20/15
GC	8.0	±0.5	35	±2.0	3.5	±0.5	0.6	Nominal	20/15
GD	8.0	±0.5	40	±2.0	3.5	±0.5	0.6	Nominal	20/15
GE	8.0	±0.5	42	±2.0	3.5	±0.5	0.6	Nominal	20/15
GF	8.0	±0.5	45	±2.0	3.5	±0.5	0.6	Nominal	20/15
GG	8.0	±0.5	50	±2.0	3.5	±0.5	0.6	Nominal	20/15
GH	8.0	±0.5	52	±2.0	3.5	±0.5	0.6	Nominal	20/15
GL	8.0	±0.5	55	±2.0	3.5	±0.5	0.6	Nominal	20/15
GN	8.0	±0.5	60	±2.0	3.5	±0.5	0.6	Nominal	20/15
HA	10.0	±0.5	35	±2.0	5.0	±0.5	0.6	Nominal	20/15
HB	10.0	±0.5	40	±2.0	5.0	±0.5	0.6	Nominal	20/15
HC	10.0	±0.5	42	±2.0	5.0	±0.5	0.6	Nominal	20/15
HD	10.0	±0.5	45	±2.0	5.0	±0.5	0.6	Nominal	20/15
HE	10.0	±0.5	50	±2.0	5.0	±0.5	0.6	Nominal	20/15
HF	10.0	±0.5	52	±2.0	5.0	±0.5	0.6	Nominal	20/15
HJ	10.0	±0.5	60	±2.0	5.0	±0.5	0.6	Nominal	20/15
K3	12.5	±0.5	35	±2.0	5.0	±0.5	0.6	Nominal	20/15
K4	12.5	±0.5	40	±2.0	5.0	±0.5	0.6	Nominal	20/15
K6	12.5	±0.5	42	±2.0	5.0	±0.5	0.6	Nominal	20/15
KA	12.5	±0.5	45	±2.0	5.0	±0.5	0.6	Nominal	20/15
KB	12.5	±0.5	50	±2.0	5.0	±0.5	0.6	Nominal	20/15
KC	12.5	±0.5	55	±2.0	5.0	±0.5	0.6	Nominal	20/15
KD	12.5	±0.5	60	±2.0	5.0	±0.5	0.6	Nominal	20/15
MP	16.0	±0.5	35	±2.0	7.5	±0.5	0.8	Nominal	20/15

Performance Characteristics

Item	Performance Characteristics		
Capacitance Range	220 – 2,200 µF	56 – 330 µF	12 – 150 µF
Capacitance Tolerance	±20% at 120 Hz/20°C		
Rated Voltage	16 – 100 VDC	160 – 200 VDC	250 – 450 VDC
Life Test	5,000 hours (see conditions in Test Methods & Performance)		
Operating Temperature	−40°C to +105°C	−25°C to +105°C	−25°C to +105°C
Leakage Current	I = 0.02 CV (µA) +15 µA	I = 0.02 CV (µA) +15 µA	I = 0.06 CV (µA) +10 µA
	C = rated capacitance (µF), V = rated voltage (VDC). Voltage applied for 2 minutes at 20°C.		

Impedance Z Characteristics at 120 Hz

Rated Voltage (VDC)	16 – 100	160 – 200	250	350	400	420 – 450
Z (−25°C)/Z (20°C)	2	4	3	5	5	6

Compensation Factor of Ripple Current (RC) vs. Frequency

Frequency (Hz)	50 – 60 Hz	120 Hz	300 Hz	1 kHz	10 – 100 kHz
6.3 – 100 (VDC) 330 – 560 µF – Coefficient	-	0.50	-	0.85	1.00
6.3 – 100 (VDC) 680 – 1,800 µF – Coefficient	-	6.00	-	0.87	1.00
6.3 – 100 (VDC) 2,200 µF – Coefficient	-	7.50	-	0.90	1.00
160 – 200 (VDC) – Coefficient	0.75	1.00	1.25	1.35	1.50
250 – 450 (VDC) – Coefficient	0.80	1.00	1.20	1.40	1.60

Test Method & Performance

Conditions	Load Life Test	Shelf Life Test
Temperature	105°C	105°C
Test Duration	5,000 hours	1,000 hours
Ripple Current	Maximum ripple current specified at 120 kHz 105°C	No ripple current applied
Voltage	The sum of DC voltage and the peak AC voltage must not exceed the rated voltage of the capacitor	No voltage applied
Performance	**The following specifications will be satisfied when the capacitor is restored to 20°C:**	
Capacitance Change	Within ±20% of the initial value	
Dissipation Factor	Does not exceed 200% of the specified value	
Leakage Current	Does not exceed specified value	

Shelf Life

The capacitance, ESR and impedance of a capacitor will not change significantly after extended storage periods, however, the leakage current will very slowly increase.

KEMET's E aluminum electrolytic capacitors should not be stored in high temperatures or where there is a high level of humidity. The suitable storage condition for KEMET's E aluminum electrolytic capacitors is +5 to +35°C and less than 75% in relative humidity. KEMET's E aluminum electrolytic capacitors should not be stored in damp conditions such as water, saltwater spray or oil spray. KEMET's E aluminum electrolytic capacitors should not be stored in an environment full of hazardous gas (hydrogen sulphide, sulphurous acid gas, nitrous acid, chlorine gas, ammonium, etc.) KEMET's E aluminum electrolytic capacitors should not be stored under exposure to ozone, ultraviolet rays or radiation.

If a capacitor has been stored for more than 18 months under these conditions and it shows increased leakage current, then a treatment by voltage application is recommended.

Re-Age (Reforming) Procedure

Apply the rated voltage to the capacitor at room temperature for a period of one hour, or until the leakage current has fallen to a steady value below the specified limit. During re-aging a maximum charging current of twice the specified leakage current or 5 mA, whichever is greater, is suggested.

Table 1A – Ratings & Part Number Reference

VDC	VDC Surge Voltage	Rated Capacitance 120 Hz 20°C (µF)	Case Size D x L (mm)	DF 120 Hz 20°C (tan δ %)*	RC 100 kHz 105°C (mA)	ESR 100 kHz 20°C (Ω)	LC 20°C 2 minutes (µA)	Part Number
16	20	1,500	8 x 30	16	1600	0.032	495	ETG158M016AGA(1)
16	20	1,800	8 x 35	16	1760	0.028	591	ETG188M016AGC(1)
16	20	2,200	8 x 40	16	1960	0.027	719	ETG228M016AGD(1)
25	32	820	8 x 30	14	1200	0.060	425	ETG827M025AGA(1)
25	32	1,000	8 x 30	14	1300	0.055	515	ETG108M025AGA(1)
25	32	1,500	8 x 45	14	1700	0.040	765	ETG158M025AGF(1)
25	32	1,800	8 x 50	14	2000	0.035	915	ETG188M025AGG(1)
25	32	2,200	8 x 60	14	2200	0.032	1115	ETG228M025AGN(1)
25	32	2,200	10 x 40	14	2100	0.032	1115	ETG228M025AHB(1)
35	44	680	8 x 30	12	1340	0.045	491	ETG687M035AGA(1)
35	44	820	8 x 35	12	1450	0.042	589	ETG827M035AGC(1)
35	44	1,000	8 x 40	12	1720	0.037	715	ETG108M035AGD(1)
35	44	1,500	8 x 60	12	2080	0.035	1065	ETG158M035AGN(1)
35	44	1,500	10 x 40	12	1850	0.035	1065	ETG158M035AHB(1)
35	44	1,800	10 x 45	12	2010	0.034	1275	ETG188M035AHD(1)
50	63	330	8 x 30	10	1110	0.065	345	ETG337M050AGA(1)
50	63	470	8 x 40	10	1400	0.060	485	ETG477M050AGD(1)
50	63	680	8 x 45	10	1600	0.050	695	ETG687M050AGF(1)
50	63	820	8 x 55	10	1820	0.045	835	ETG827M050AGL(1)
50	63	820	10 x 40	10	1750	0.040	835	ETG827M050AHB(1)
50	63	1,000	10 x 45	10	1950	0.039	1015	ETG108M050AHD(1)
63	79	220	8 x 30	9	1150	0.060	292	ETG227M063AGA(1)
63	79	330	8 x 40	9	1340	0.058	431	ETG337M063AGD(1)
63	79	470	8 x 50	9	1700	0.045	607	ETG477M063AGG(1)
63	79	680	10 x 45	9	1900	0.042	872	ETG687M063AHD(1)
100	125	220	8 x 50	8	1540	0.055	455	ETG227M100AGG(1)
100	125	330	10 x 45	8	1730	0.050	675	ETG337M100AHD(1)
100	125	470	10 x 60	8	2250	0.038	955	ETG477M100AHJ(1)
VDC	**VDC Surge**	**Rated Capacitance**	**Case Size**	**DF**	**RC**	**ESR**	**LC**	**Part Number**

(1) Insert packaging code. See Ordering Options Table for available options.
** When capacitance exceeds 1,000 µF, the DF value (%) is increased by 2% for every additional 1,000 µF.*

Table 1B – Ratings & Part Number Reference

VDC	VDC Surge Voltage	Rated Capacitance 120 Hz 20°C (µF)	Case Size D x L (mm)	DF 120 Hz 20°C (tan δ %)*	RC 120 kHz 105°C (mA)	LC 20°C 2 minutes (µA)	Part Number
160	200	56	8 x 35	18	260	194	ETG566M160AGC(1)
160	200	68	8 x 40	18	335	233	ETG686M160AGD(1)
160	200	82	8 x 45	18	390	277	ETG826M160AGF(1)
160	200	100	8 x 50	18	470	335	ETG107M160AGG(1)
160	200	120	10 x 40	18	520	399	ETG127M160AHB(1)
160	200	150	10 x 50	18	650	495	ETG157M160AHE(1)
160	200	180	12.5 x 40	18	745	591	ETG187M160AK4(1)
160	200	220	12.5 x 45	18	830	719	ETG227M160AKA(1)
160	200	270	12.5 x 50	18	960	879	ETG277M160AKB(1)
160	200	330	12.5 x 55	18	1100	1071	ETG337M160AKC(1)
200	250	56	8 x 45	18	285	239	ETG566M200AGF(1)
200	250	68	8 x 50	18	350	287	ETG686M200AGG(1)
200	250	82	10 x 40	18	460	343	ETG826M200AHB(1)
200	250	100	10 x 45	18	470	415	ETG107M200AHD(1)
200	250	120	10 x 50	18	570	495	ETG127M200AHE(1)
200	250	150	12.5 x 45	18	710	615	ETG157M200AKA(1)
200	250	180	12.5 x 50	18	785	735	ETG187M200AKB(1)
200	250	220	12.5 x 55	18	880	895	ETG227M200AKC(1)
200	250	270	12.5 x 60	18	1030	1095	ETG277M200AKD(1)
VDC	**VDC Surge**	**Rated Capacitance**	**Case Size**	**DF**	**RC**	**LC**	**Part Number**

(1) Insert packaging code. See Ordering Options Table for available options.
** When capacitance exceeds 1,000 µF, the DF value (%) is increased by 2% for every additional 1,000 µF.*

Table 1C – Ratings & Part Number Reference

VDC	VDC Surge Voltage	Rated Capacitance 120 Hz 20°C (µF)	Case Size D x L (mm)	DF 120 Hz 20°C (tan δ %)*	RC 120 kHZ 105°C (mA)	LC 20°C 2 minutes (µA)	Part Number
250	300	27	8 x 32	15	150	415	ETG276M250AGB(1)
250	300	33	8 x 35	15	170	505	ETG336M250AGC(1)
250	300	39	8 x 42	15	200	595	ETG396M250AGE(1)
250	300	47	8 x 45	15	220	715	ETG476M250AGF(1)
250	300	56	10 x 42	15	300	850	ETG566M250AHC(1)
250	300	68	10 x 45	15	330	1030	ETG686M250AHD(1)
250	300	82	10 x 50	15	390	1240	ETG826M250AHE(1)
250	300	100	12.5 x 42	15	440	1510	ETG107M250AK6(1)
250	300	120	12.5 x 45	15	490	1810	ETG127M250AKA(1)
250	300	150	12.5 x 50	15	560	2260	ETG157M250AKB(1)
350	400	15	8 x 35	20	120	325	ETG156M350AGC(1)
350	400	22	8 x 40	20	150	472	ETG226M350AGD(1)
350	400	27	8 x 45	20	170	577	ETG276M350AGF(1)
350	400	33	8 x 50	20	200	703	ETG336M350AGG(1)
350	400	39	10 x 45	20	235	829	ETG396M350AHD(1)
350	400	47	10 x 50	20	270	997	ETG476M350AHE(1)
350	400	56	12.5 x 40	20	300	1186	ETG566M350AK4(1)
350	400	68	12.5 x 45	20	350	1438	ETG686M350AKA(1)
350	400	82	12.5 x 50	20	400	1732	ETG826M350AKB(1)
350	400	100	12.5 x 55	20	460	2110	ETG107M350AKC(1)
400	450	15	8 x 35	24	110	370	ETG156M400AGC(1)
400	450	22	8 x 40	24	140	538	ETG226M400AGD(1)
400	450	27	8 x 45	24	165	658	ETG276M400AGF(1)
400	450	27	10 x 35	24	165	658	ETG276M400AHA(1)
400	450	33	8 x 50	24	190	802	ETG336M400AGG(1)
400	450	33	10 x 40	24	190	802	ETG336M400AHB(1)
400	450	39	10 x 45	24	220	946	ETG396M400AHD(1)
400	450	47	10 x 50	24	255	1138	ETG476M400AHE(1)
400	450	47	12.5 x 40	24	255	1138	ETG476M400AK4(1)
400	450	56	12.5 x 45	24	300	1354	ETG566M400AKA(1)
400	450	68	12.5 x 50	24	350	1642	ETG686M400AKB(1)
400	450	82	12.5 x 55	24	400	1978	ETG826M400AKC(1)
400	450	100	16 x 35	20	705	825	ETG107M400AMP(1)
420	470	15	8 x 35	24	105	388	ETG156M420AGC(1)
420	470	22	8 x 40	24	135	564.4	ETG226M420AGD(1)
420	470	27	8 x 45	24	155	690.4	ETG276M420AGF(1)
420	470	27	10 x 35	24	155	690.4	ETG276M420AHA(1)
420	470	33	8 x 50	24	185	841.6	ETG336M420AGG(1)
420	470	33	10 x 40	24	185	841.6	ETG336M420AHB(1)
420	470	39	10 x 45	24	215	992.8	ETG396M420AHD(1)
420	470	39	12.5 x 35	24	215	992.8	ETG396M420AK3(1)
420	470	47	10 x 50	24	245	1194.4	ETG476M420AHE(1)
420	470	47	12.5 x 40	24	245	1194.4	ETG476M420AK4(1)
420	470	56	12.5 x 45	24	290	1421.2	ETG566M420AKA(1)
420	470	68	12.5 x 50	24	335	1723.6	ETG686M420AKB(1)
420	470	82	12.5 x 55	24	385	2076.4	ETG826M420AKC(1)
450	500	12	8 x 35	24	110	334	ETG126M450AGC(1)
450	500	15	8 x 40	24	130	415	ETG156M450AGD(1)
450	500	22	8 x 45	24	165	604	ETG226M450AGF(1)
450	500	22	10 x 35	24	165	604	ETG226M450AHA(1)
450	500	27	8 x 52	24	195	739	ETG276M450AGH(1)
450	500	27	10 x 40	24	195	739	ETG276M450AHB(1)
450	500	33	10 x 45	24	230	901	ETG336M450AHD(1)
450	500	33	12.5 x 35	24	230	901	ETG336M450AK3(1)
450	500	39	10 x 50	24	265	1063	ETG396M450AHE(1)
450	500	39	12.5 x 40	24	265	1063	ETG396M450AK4(1)
450	500	47	10 x 52	24	295	1279	ETG476M450AHF(1)
450	500	47	12.5 x 45	24	310	1279	ETG476M450AKA(1)
450	500	56	12.5 x 50	24	355	1522	ETG566M450AKB(1)
450	500	68	12.5 x 55	24	410	1846	ETG686M450AKC(1)
VDC	**VDC Surge**	**Rated Capacitance**	**Case Size**	**DF**	**RC**	**LC**	**Part Number**

(1) Insert packaging code. See Ordering Options Table for available options.
** When capacitance exceeds 1,000 µF, the DF value (%) is increased by 2% for every additional 1,000 µF.*

Mounting Positions (Safety Vent)

In operation, electrolytic capacitors will always conduct a leakage current, which causes electrolysis. The oxygen produced by electrolysis will regenerate the dielectric layer but, at the same time, the hydrogen released may cause the internal pressure of the capacitor to increase. The overpressure vent, or safety vent, ensures that the gas can escape when the pressure reaches a certain value. All mounting positions must allow the safety vent to work properly.

Installing

- As a general principle, lower-use temperatures result in a longer, useful life of the capacitor. For this reason, it should be ensured that electrolytic capacitors are placed away from heat-emitting components. Adequate space should be allowed between components for cooling air to circulate, particularly when high ripple current loads are applied. In any case, the maximum category temperature must not be exceeded.
- Do not deform the case of the capacitors or use capacitors with a deformed case.
- Verify that the connections of the capacitors are able to insert on the board without excessive mechanical force.
- If the capacitors require mounting through additional means, the recommended mounting accessories shall be used.
- Verify the correct polarization of the capacitor on the board.
- Verify that the space around the pressure relief device is according to the following guideline:

Case Diameter	Space Around Safety Vent
≤ 16 mm	> 2 mm
> 16 to ≤ 40 mm	> 3 mm
> 40 mm	> 5 mm

It is recommended that capacitors always be mounted with the safety device uppermost or in the upper part of the capacitor.

- If the capacitors are stored for a long time, the leakage current must be verified. If the leakage current is superior to the value listed in this catalog, the capacitors must be reformed. In this case, they can be reformed by application of the rated voltage through a series resistor approximately 1 kΩ for capacitors with V_R ≤ 160 V (5 W resistor) and 10 kΩ for the other rated voltages.
- In the case of capacitors connected in a series, a suitable voltage sharing must be used.
  In the case of balancing resistors, the approximate resistance value can be calculated as: R = 60/C.

KEMET recommends, nevertheless, to ensure that the voltage across each capacitor does not exceed its rated voltage.

Application & Operation Guidelines

Electrical Ratings:
Capacitance (ESC)

Simplified equivalent circuit diagram of an electrolytic capacitor

The capacitive component of the equivalent series circuit, (equivalent series capacitance - ESC), is determined by applying an alternate voltage of ≤ 0.5 V at a frequency of 120 or 100 Hz and 20°C (IEC 384-1, 384-4).

Temperature Dependence of the Capacitance
Capacitance of an electrolytic capacitor depends upon temperature: with decreasing temperature the viscosity of the electrolyte increases, thereby reducing its conductivity.
Capacitance will decrease if temperature decreases. Furthermore, temperature drifts cause armature dilatation and, therefore, capacitance changes (up to 20% depending on the series considered, from 0 to 80°C). This phenomenon is more evident for electrolytic capacitors than for other types.

Frequency Dependence of the Capacitance
Effective capacitance value is derived from the impedance curve, as long as impedance is still in the range where the capacitance component is dominant.

$$C = \frac{1}{2\pi f Z}$$

C = capacitance (F)
f = frequency (Hz)
Z = impedance (Ω)

Dissipation Factor tan δ (DF)
Dissipation Factor tan δ is the ratio between the active and reactive power for a sinusoidal waveform voltage. It can be thought of as a measurement of the gap between an actual and ideal capacitor.

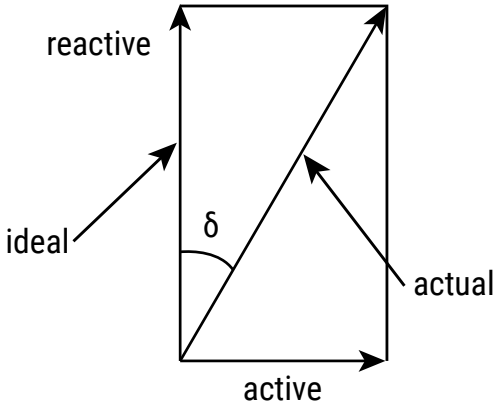

Tan δ is measured with the same set-up used for the series capacitance ESC.
Tan δ = ω x ESC x ESR where:
ESC = Equivalent series capacitance
ESR = Equivalent series resistance

Application & Operation Guidelines cont.

Equivalent Series Inductance (ESL)
Equivalent series inductance or self inductance results from the terminal configuration and internal design of the capacitor.

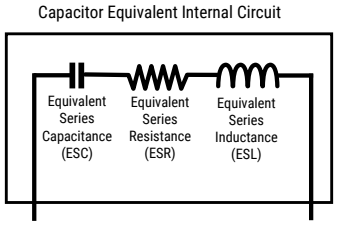

Equivalent Series Resistance (ESR)
Equivalent series resistance is the resistive component of the equivalent series circuit. ESR value depends on frequency and temperature, and is related to the tan δ by the following equation:

$$ESR = \frac{\tan \delta}{2\pi f\ ESC}$$

ESR = Equivalent series resistance (Ω)
tan δ = Dissipation factor
ESC = Equivalent series capacitance (F)
f = Frequency (Hz)

Tolerance limits of the rated capacitance must be taken into account when calculating this value.

Impedance (Z)
Impedance of an electrolytic capacitor results from a circuit formed by the following individual equivalent series components:

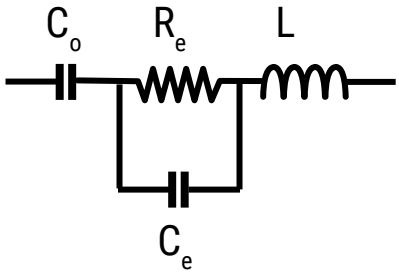

C_o = Aluminum oxide capacitance (surface and thickness of the dielectric.)
R_e = Resistance of electrolyte and paper mixture (other resistances not depending on the frequency are not considered: tabs, plates, etc.)
C_e = Electrolyte soaked paper capacitance.
L = Inductive reactance of the capacitor winding and terminals.
Impedance of an electrolytic capacitor is not a constant quantity that retains its value under all conditions; it changes depending on frequency and temperature.
Impedance as a function of frequency (sinusoidal waveform) for a certain temperature can be represented as follows:

Application & Operation Guidelines cont.

Impedance (Z) cont.

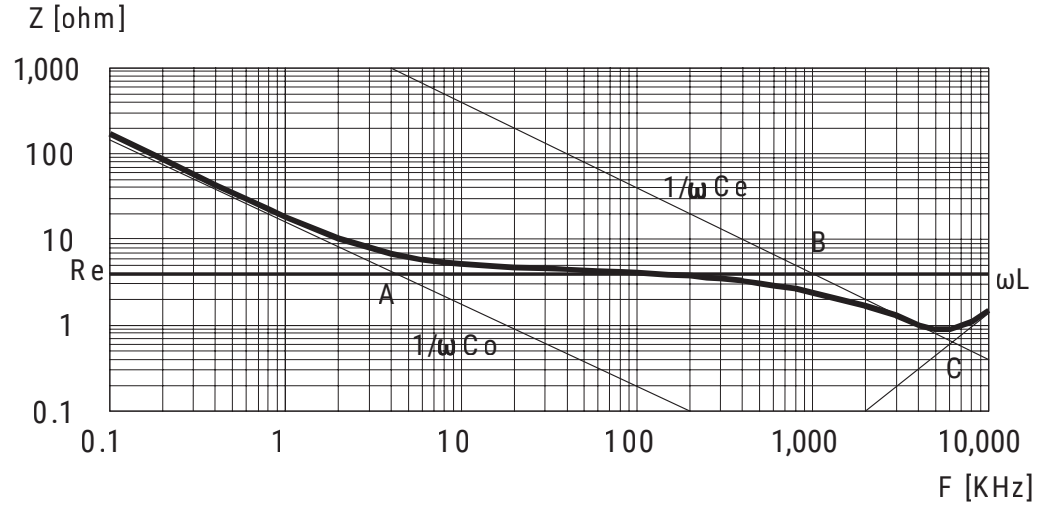

- Capacitive reactance predominates at low frequencies.
- With increasing frequency, capacitive reactance $Xc = 1/\omega C_o$ decreases until it reaches the order of magnitude of electrolyte resistance R_e(A)
- At even higher frequencies, resistance of the electrolyte predominates: $Z = R_e$ (A - B)
- When the capacitor's resonance frequency is reached (ω_0), capacitive and inductive reactance mutually cancel each other $1/\omega C_e = \omega L$, $\omega_0 = 1/SQR(LC_e)$
- Above this frequency, inductive reactance of the winding and its terminals (XL = Z = ωL) becomes effective and leads to an increase in impedance

Generally speaking, it can be estimated that $C_e \approx 0.01\ C_o$.

Impedance as a function of frequency (sinusoidal waveform) for different temperature values can be represented as follows (typical values):

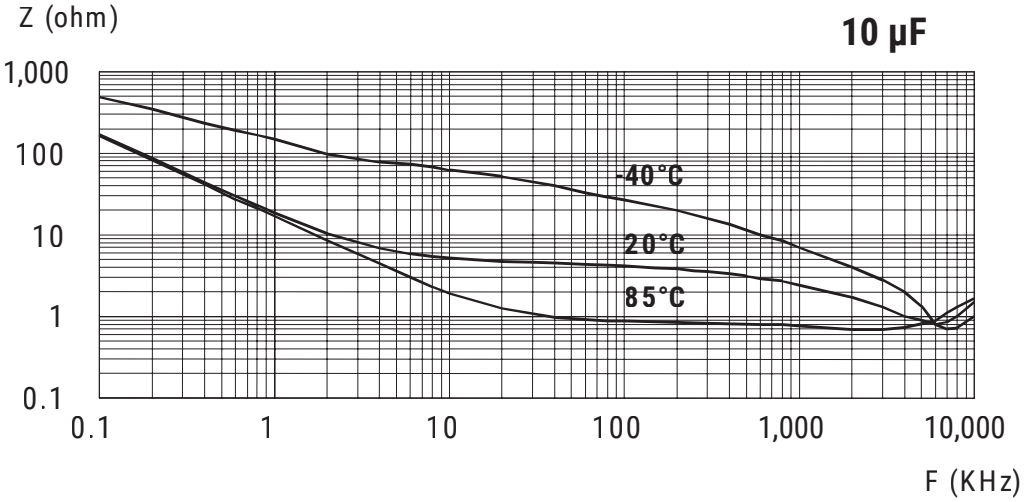

R_e is the most temperature-dependent component of an electrolytic capacitor equivalent circuit. Electrolyte resistivity will decrease if temperature rises.

In order to obtain a low impedance value throughout the temperature range, R_e must be as little as possible. However, R_e values that are too low indicate a very aggressive electrolyte, resulting in a shorter life of the electrolytic capacitor at high temperatures. A compromise must be reached.

Application & Operation Guidelines cont.

Leakage Current (LC)
Due to the aluminum oxide layer that serves as a dielectric, a small current will continue to flow even after a DC voltage has been applied for long periods. This current is called leakage current.

A high leakage current flows after applying voltage to the capacitor then decreases in a few minutes, for example, after prolonged storage without any applied voltage. In the course of continuous operation, the leakage current will decrease and reach an almost constant value.

After a voltage-free storage the oxide layer may deteriorate, especially at a high temperature. Since there are no leakage currents to transport oxygen ions to the anode, the oxide layer is not regenerated. The result is that a higher than normal leakage current will flow when voltage is applied after prolonged storage.

As the oxide layer is regenerated in use, the leakage current will gradually decrease to its normal level.
The relationship between the leakage current and voltage applied at constant temperature can be shown schematically as follows:

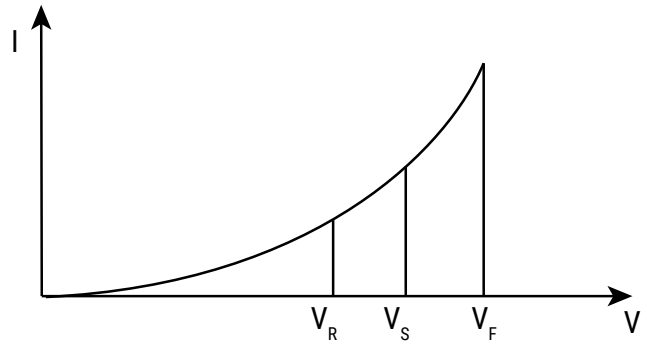

Where:
V_F = Forming voltage
If this level is exceeded, a large quantity of heat and gas will be generated and the capacitor could be damaged.
V_R = Rated voltage
This level represents the top of the linear part of the curve.
V_S = Surge voltage
This lies between V_R and V_F. The capacitor can be subjected to V_S for short periods only.

Electrolytic capacitors are subjected to a reforming process before acceptance testing. The purpose of this preconditioning is to ensure that the same initial conditions are maintained when comparing different products.

Ripple Current (RC)
The maximum ripple current value depends on:
- Ambient temperature
- Surface area of the capacitor (heat dissipation area)
tan δ or ESR
- Frequency

The capacitor's life depends on the thermal stress.

Application & Operation Guidelines cont.

Frequency Dependence of the Ripple Current
ESR and, thus, the tan δ depend on the frequency of the applied voltage. This indicates that the allowed ripple current is also a function of the frequency.

Temperature Dependence of the Ripple Current
The data sheet specifies maximum ripple current at the upper category temperature for each capacitor.

Expected Life Calculation
Expected life depends on operating temperature according to the following formula: $L = Lo \times 2^{(To-T)/10}$
Where:

L: Expected life
Lo: Load life at a maximum permissible operating temperature
T: Actual operating temperature
To: Maximum permissible operating temperature

This formula is applicable between 40°C and To.

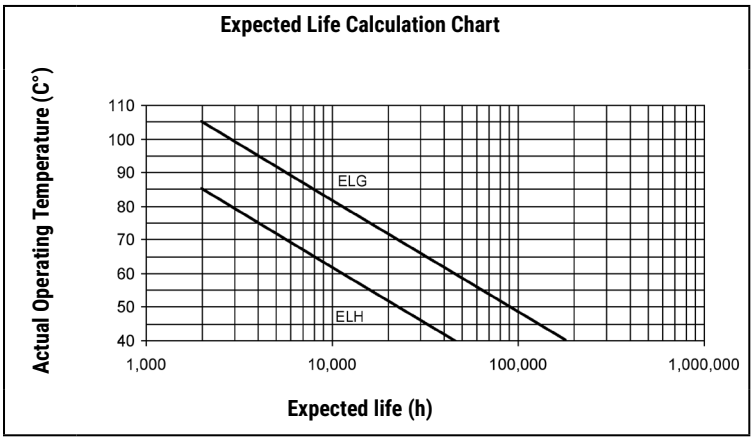

Marking

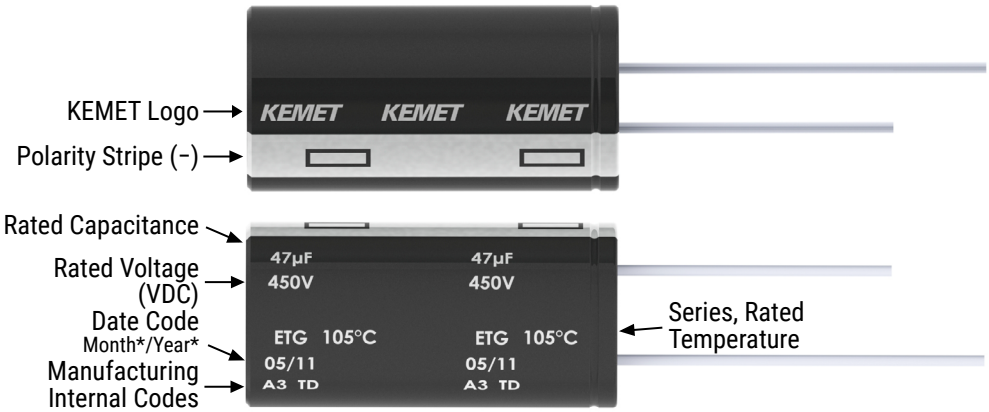

*Y = Year

Code	01	02	03	04	05	06	07	08	09
Year	2011	2012	2013	2014	2015	2016	2017	2018	2019

*M = Month

Code	01	02	03	04	05	06	07	08	09	10	11	12
Month	1	2	3	4	5	6	7	8	9	10	11	12

** Image for reference only. A slight change in the layout can occur, not affecting the marking content. This change will not impact the product's form, fit, or function, as the products remain equivalent in physical, mechanical, quality, and reliability characteristics.

Construction

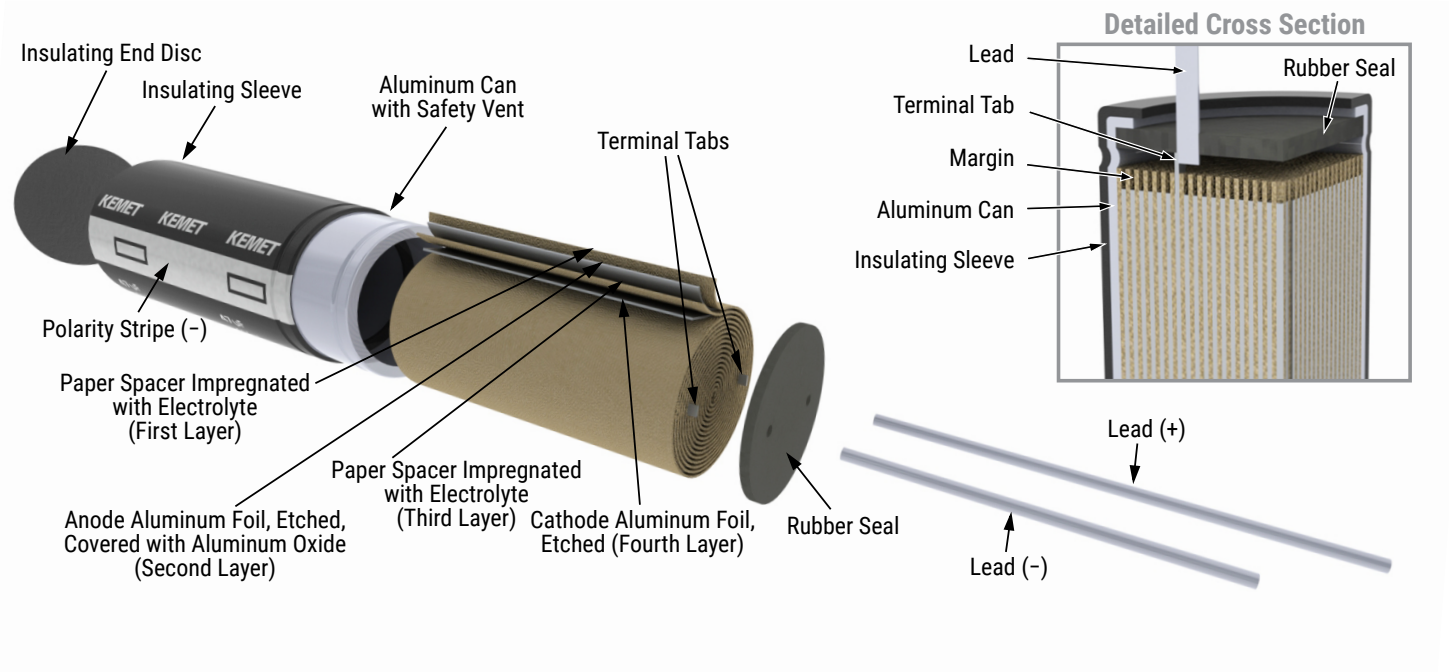

Taping for Automatic Insertion Machines

Formed to 2.5 mm
(Lead and packaging code LA and FA)

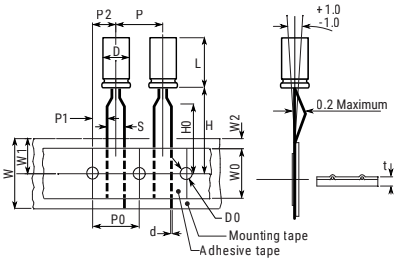

Formed to 5 mm
(Lead and packaging code JA and DA)

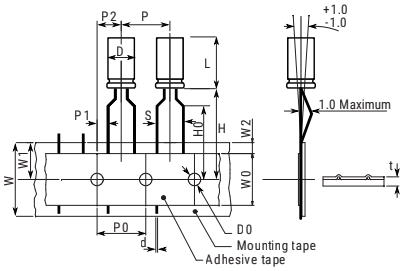

Straight Leads (Diameter: 4 – 8 mm)
Lead and packaging code EA and KA

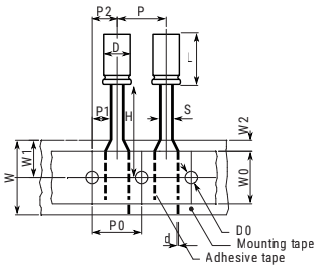

Straight Leads (Diameter > 8)
Lead and packaging code EA and KA

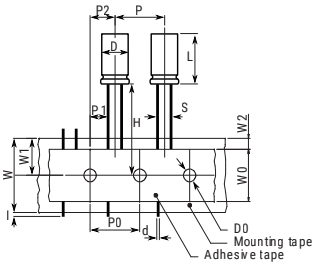

Dimensions (mm)	D	L	S	d	P	P0	P1	P2	W	W0	W1	W2	H0	H1	I	D0	t
Tolerance	**+0.5**		**+0.8/−0.2**	**±0.05**	**±1.0**	**±0.3**	**±0.7**	**±1.3**	**+1/−0.5**	**±0.5**	**Maximum**	**Maximum**	**±0.75**	**±0.5**	**Maximum**	**±0.2**	**±0.2**
Formed to 2.5 mm	4	5 – 7	2.5	0.45	12.7	12.7	5.1	6.35	18	12	11	3	16.0	18.5		4	0.7
	5	≤ 7	2.5	0.45	12.7	12.7	5.1	6.35	18	12	11	3	16.0	18.5		4	0.7
		> 7	2.5	0.50	12.7	12.7	5.1	6.35	18	12	11	3	16.0	18.5		4	0.7
Formed to 5 mm	4	5 – 7	5.0	0.45	12.7	12.7	3.85	6.35	18	12	11	3	16.0	18.5		4	0.7
	5	≤ 7	5.0	0.45	12.7	12.7	3.85	6.35	18	12	11	3	16.0	18.5		4	0.7
		>7	5.0	0.50	12.7	12.7	3.85	6.35	18	12	11	3	16.0	18.5		4	0.7
	6	≤ 7	5.0	0.50	12.7	12.7	3.85	6.35	18	12	11	3	16.0	18.5		4	0.7
		> 7	5.0	0.50	12.7	12.7	3.85	6.35	18	12	11	3	16.0	18.5		4	0.7
	8	≤ 7	5.0	0.50	12.7	12.7	3.85	6.35	18	12	11	3	16.0	18.5		4	0.7
		> 7	5.0	0.50	12.7	12.7	3.85	6.35	18	12	11	3	16.0	18.5		4	0.7
Straight leads	4	5 – 7	1.5	0.45	12.7	12.7	5.6	6.35	18	12	11	3	18.5			4	0.7
	5	≤ 7	2.0	0.45	12.7	12.7	5.35	6.35	18	12	11	3	18.5			4	0.7
		> 7	2.0	0.50	12.7	12.7	5.35	6.35	18	12	11	3	18.5			4	0.7
	6	≤ 7	2.5	0.50	12.7	12.7	5.1	6.35	18	12	11	3	18.5			4	0.7
		> 7	2.5	0.50	12.7	12.7	5.1	6.35	18	12	11	3	18.5			4	0.7
	8	≤ 7	3.5	0.50	12.7	12.7	4.6	6.35	18	12	11	3	18.5			4	0.7
		> 7	3.5	0.50	12.7	12.7	4.6	6.35	18	12	11	3	18.5			4	0.7
	10	≤ 20	5.0	0.60	12.7	12.7	3.85	6.35	18	12	11	3	18.5		1	4	1.0

Lead Taping & Packaging

Ammo Box

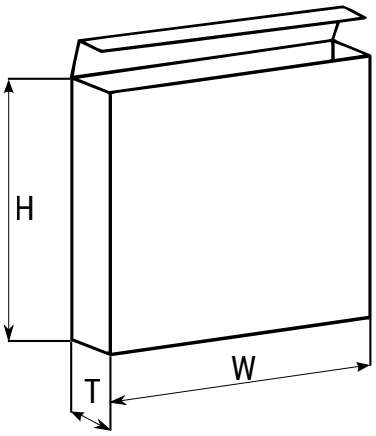

Reel

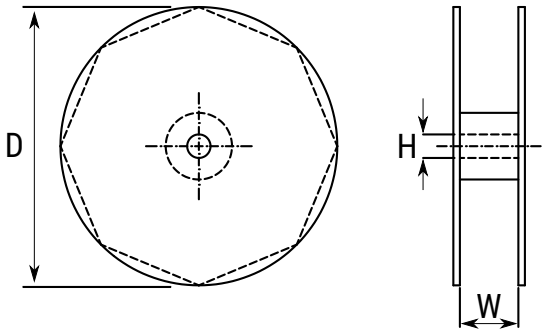

Diameter	Length	Ammo			Reel		
		H	W	T	D	H	W
			Maximum	Maximum	±2	±0.5	+1/-0.1
4	All	230	340	42	350	30	50
5	≤ 7	230	340	42			
5	11	275	340	42			
6.3	≤ 7	235	340	45			
6.3	11	230	340	48			
8	≤ 7	270	340	48			
8	11	235	340	48			
8	>11 ≤ 20	240	340	57			
10	≤ 13	250	340	52			
10	>13 ≤ 20	256	340	57			
10	>20	250	340	60	NA	NA	NA
12	All	270	340	57			
13	All	285	340	62			
16	All	265	340	62			
18	All	288	340	65			

Construction Data

The manufacturing process begins with the anode foil being electrochemically etched to increase the surface area and then "formed" to produce the aluminum oxide layer. Both the anode and cathode foils are then interleaved with absorbent paper and wound into a cylinder. During the winding process, aluminum tabs are attached to each foil to provide the electrical contact.

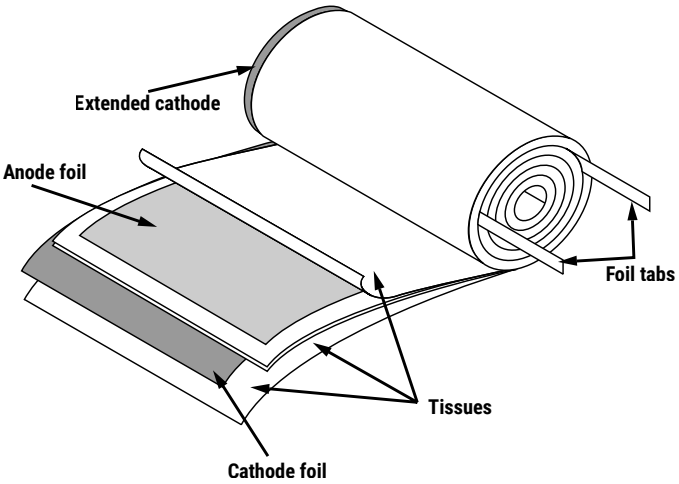

The deck, complete with terminals, is attached to the tabs and then folded down to rest on top of the winding. The complete winding is impregnated with electrolyte before being housed in a suitable container, usually an aluminum can, and sealed. Throughout the process, all materials inside the housing must be maintained at the highest purity and be compatible with the electrolyte.

Each capacitor is aged and tested before being sleeved and packed. The purpose of aging is to repair any damage in the oxide layer and thus reduce the leakage current to a very low level. Aging is normally carried out at the rated temperature of the capacitor and is accomplished by applying voltage to the device while carefully controlling the supply current. The process may take several hours to complete.

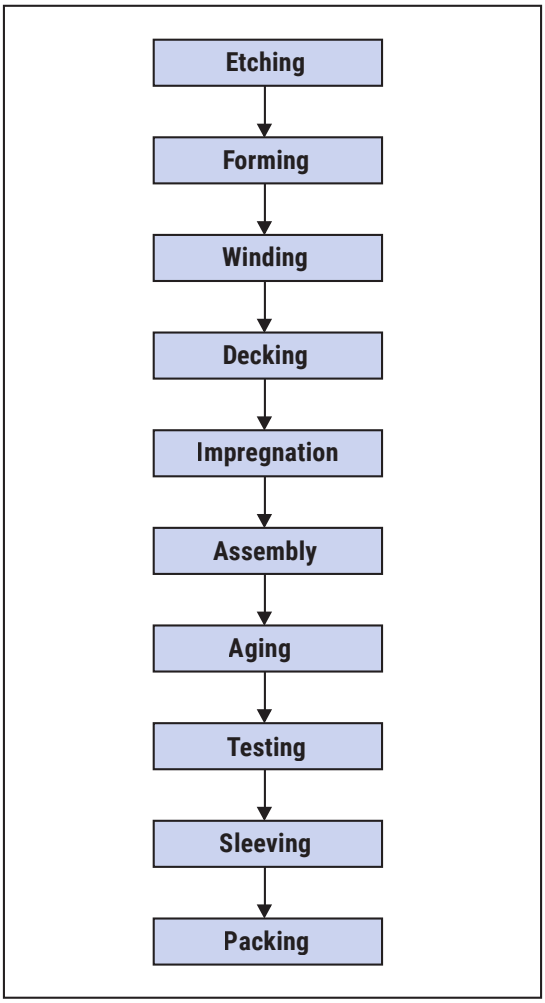

Damage to the oxide layer can occur due to variety of reasons:

- Slitting of the anode foil after forming
- Attaching the tabs to the anode foil
- Minor mechanical damage caused during winding

A sample from each batch is taken by the quality department after completion of the production process. This sample size is controlled by the use of recognized sampling tables defined in BS 6001.

The following tests are applied and may be varied at the request of the customer. In this case the batch, or special procedure, will determine the course of action.

Electrical:

- Leakage current
- Capacitance
- ESR
- Impedance
- Tan Delta

Mechanical/Visual:

- Overall dimensions
- Torque test of mounting stud
- Print detail
- Box labels
- Packaging, including packed quantity

KEMET Electronics Corporation Sales Offices

For a complete list of our global sales offices, please visit https://www.yageogroup.com/SalesResources/SalesOffices

Disclaimer

YAGEO Corporation and its affiliates do not recommend the use of commercial or automotive grade products for high reliability applications or manned space flight.

All product specifications, statements, information and data (collectively, the "Information") in this datasheet are subject to change. The customer is responsible for checking and verifying the extent to which the Information contained in this publication is applicable to an order at the time the order is placed. All Information given herein is believed to be accurate and reliable, but it is presented without guarantee, warranty, or responsibility of any kind, expressed or implied.

Statements of suitability for certain applications are based on KEMET Electronics Corporation's ("KEMET") knowledge of typical operating conditions for such applications, but are not intended to constitute – and KEMET specifically disclaims – any warranty concerning suitability for a specific customer application or use. The Information is intended for use only by customers who have the requisite experience and capability to determine the correct products for their application. Any technical advice inferred from this Information or otherwise provided by KEMET with reference to the use of KEMET's products is given gratis, and KEMET assumes no obligation or liability for the advice given or results obtained.

Although KEMET designs and manufactures its products to the most stringent quality and safety standards, given the current state of the art, isolated component failures may still occur. Accordingly, customer applications which require a high degree of reliability or safety should employ suitable designs or other safeguards (such as installation of protective circuitry or redundancies) in order to ensure that the failure of an electrical component does not result in a risk of personal injury or property damage.

Although all product–related warnings, cautions and notes must be observed, the customer should not assume that all safety measures are indicated or that other measures may not be required.

KEMET requires its products to be packaged and shipped on pallets. This is because KEMET's products are specifically designed to be packed onto pallets during shipment. If for any reason, the products are removed from pallets by the shipping party and shipped to the end customer, then additional external protection is required. In this instance, an external box with two carton layers and an upwards orientation sticker must be used by the shipping party, with the empty space filled with filling material, and afterwards sealing the box. If this packing and packaging guideline is not followed by the shipping party, the shipping party, and not KEMET, will be held responsible for any packaging, packing and/or product damages upon delivery of the products to the end customer. KEMET hereby disclaims any liability for damages to the products or otherwise that have been, or threaten to be, inflicted, result from or are in any way related to the packaging, packing or damage by the shipping party in contravention of the packing and packaging guidelines herein.

KEMET is a registered trademark of KEMET Electronics Corporation.