August 19th, 2025

Rethinking Ceramic Capacitors: Meeting Today's Design Challenges with Tomorrow's Innovation

The Shift: Electrification, Miniaturization, and Reliability

The electronics landscape is undergoing a radical transformation. Whether it's electric vehicles, artificial intelligence, 5G connectivity, renewable energy systems, or edge computing, engineers are asked to do more in less space, with more heat, more power, and more data. At the center of this storm is the humble ceramic capacitor—quietly critical to circuit stability, noise reduction, energy storage, and signal integrity. And yet, traditional MLCCs (Multilayer Ceramic Capacitors) often fall short in today's demanding environments.

The Engineering Dilemma

Designers face a critical trade-off: achieving high capacitance in a small form factor while maintaining thermal stability, mechanical robustness, and electrical reliability. For OEMs, a single capacitor failure could mean massive recalls, lost customer trust, or catastrophic failure in automotive, medical, or industrial systems. Compounding this challenge is a growing need to reduce board space, improve EMI filtering, and withstand flex, vibration, and temperature cycling.

YAGEO Group's Answer: Performance-Driven MLCC Innovation

YAGEO Group's ceramic capacitor portfolio brings cutting-edge technology to meet these challenges head-on. From KONNEKT™ to KC-LINK™, from ArcShield™ to Embedded MLCCs, we offer solutions that aren't just better—they're engineered for tomorrow's most demanding applications.

Flex Mitigation: Reliability Under Pressure

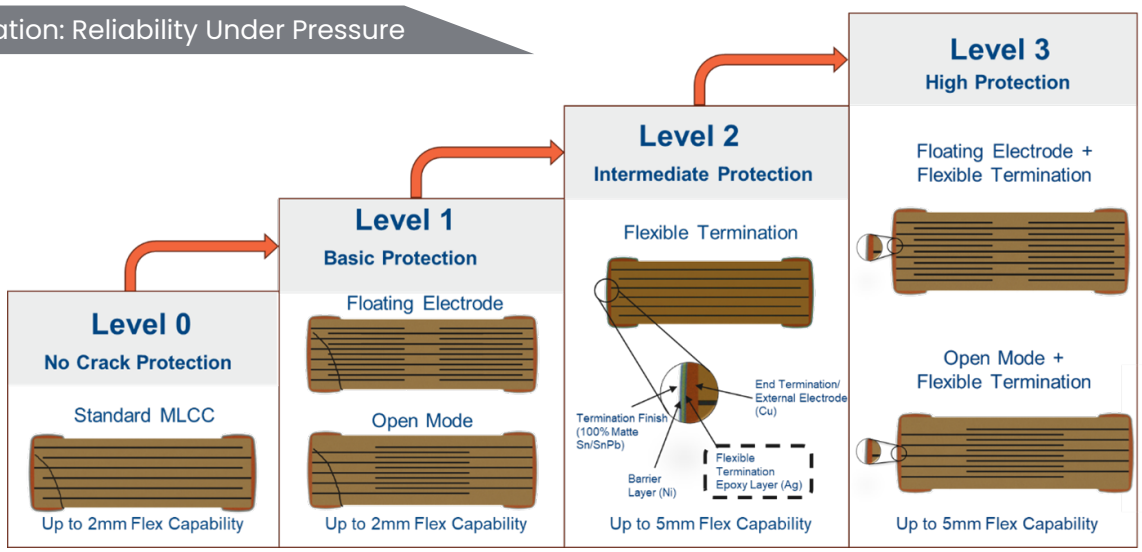

August 19th, 2025

Flex cracks from PCB stress is one of the most common failure modes for ceramic capacitors. YAGEO Group offers an extensive portfolio of flex-mitigation solutions, including Flexible Termination, Floating Electrode, Open Mode, and Leaded designs. This broad range of options provides designers with enhanced robustness and protection against short-circuit failures in critical applications

KONNEKT™ Technology: Power Density Redefined

YAGEO GROUP KONNEKT™ High Density Packaging

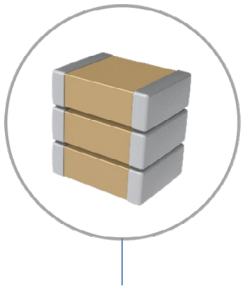

Standard Orientation

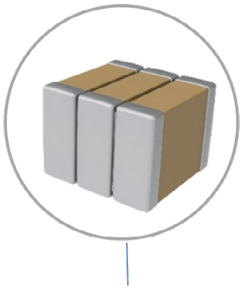

Low Loss Orientation

Designed using proprietary TLPS (Transient Liquid Phase Sintering), KONNEKT™ Technology delivers unmatched power density in a leadless multi-chip form factor. Whether you're designing power inverters for EVs or needing more bulk capacitance in the same footprint.

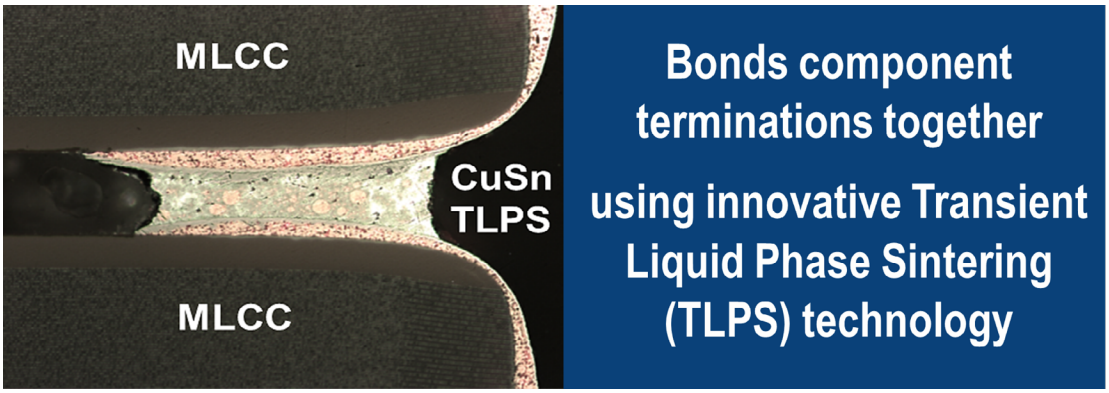

KONNEKT™ provides:

- High capacitance in the same footprint
- Ultra-low ESR and ESL
- High ripple current capability
- Surface mount compatibility with standard MLCC relow profiles

In low loss orientation, KONNEKT™ provides even lower ESR and higher ripple current capability for increased power density.

August 19th, 2025

KC-LINK™: Designed for High Frequency, High Power

KC-LINK
DC LINK CAPACITORS

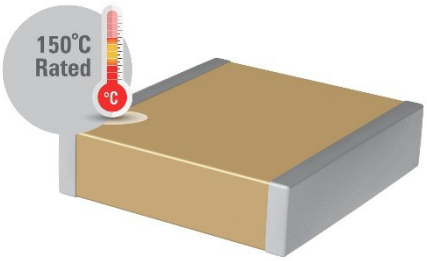

YAGEO Group's KC-LINK™ surface mount capacitors are designed to meet the growing demand for fast switching wide bandgap (WBG) semiconductors that operate at higher voltages, temperatures, and frequencies. By utilizing YAGEO Group's robust and proprietary C0G/NPO base metal electrode (BME) dielectric system, these capacitors are well-suited for power converters, inverters, snubbers, and resonators, where high efficiency is a primary concern.

ArcShield™: Preventing Surface Arcing in High Voltage Systems

ARCSHIELD
CIRCUIT PROTECTION

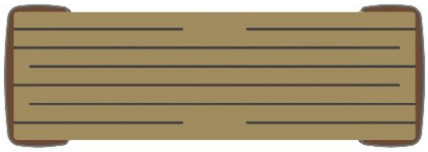

The phenomenon of surface arcing is caused by a high voltage gradient between the two termination surfaces or between one of the termination surfaces and the counter internal electrode structure within the ceramic body. This phenomenon can either damage surrounding components or lead to a breakdown of the dielectric material, ultimately resulting in a short circuit condition (catastrophic failure mode). Patented ArcShield technology features YAGEO Group's highly reliable base metal dielectric system, combined with a unique internal shield electrode structure that is designed to suppress an arcover event while increasing available capacitance. Developed on the principle of a partial Faraday cage, this internal system offers unrivaled performance and reliability when compared to external surface coating technologies.

August 19th, 2025

Embedded MLCCs: Saving Space and Improving Signal Integrity

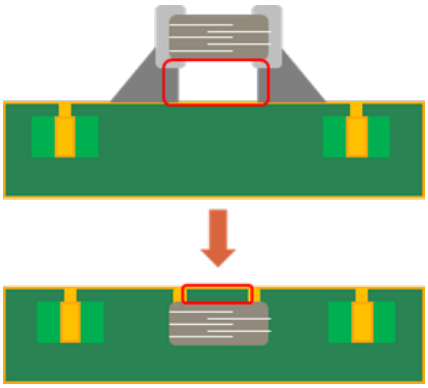

Embedding MLCCs directly under high-frequency ICs like CPUs or transceivers offers a clear path to reducing parasitics and saving PCB real estate. YAGEO Group's embedded solutions show measurable performance gains in 5G and mobile applications, shortening current paths and reducing ESR/ESL significantly. OEMs also benefit from cost savings in assembly and improved thermal performance.

The Automotive Grade Standard: Beyond AEC-Q200

Automotive MLCCs from YAGEO Group go beyond the stringent AEC-Q200 qualification. Every part is 100% tested (Capacitance, DC, IR, DWV) and goes through our rigorous Automtoive End of Line Testing. Offering some of the industry's highest capcacitance values, these MLCCs are ideal for all systems in both standard ICE (Internal Combustion Engine) and Electrical Vehicles.

Ceramic Capacitors for High Temp and Harsh Environments

YAGEO Group offers a broad range of high-temperature capacitors for demanding harsh-environment applications. From 150°C-rated automotive-grade MLCCs for under-hood applications to 260°C MLCCs for deep-well drilling, our capacitors are designed and qualified to meet the most stringent requirements.

August 19th, 2025

Safety First: Certified Capacitors for Line Voltage Applications

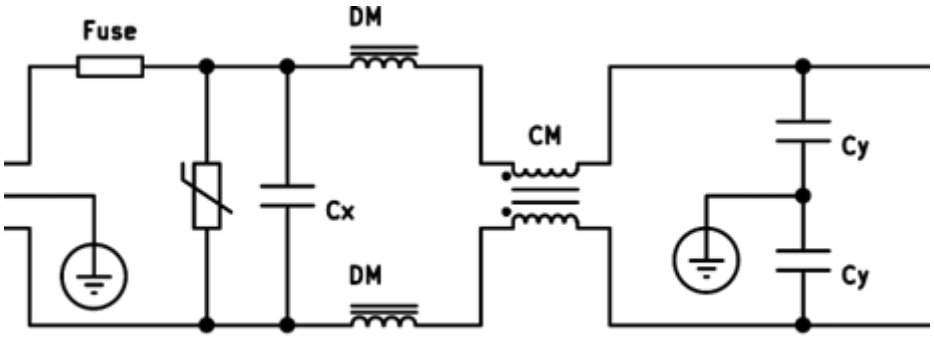

YAGEO Group's safety capacitors meet IEC 60384-14 and are available in both through-hole (THT) and SMD versions. Whether used in EMI filtering, surge protection, or lightning arrest, our X1/Y2-rated devices maintain clearance and creepage requirements while offering flexible lead options for optimal PCB layout.

Conclusion: Smarter Ceramic Choices for Complex Systems

YAGEO Group has reimagined the ceramic capacitor to meet the evolving demands of power, space, temperature, and reliability. Through robust innovation and deep application insight, we empower designers to build smarter, safer, and more efficient systems.

Explore our simulation tools, access datasheets, or contact our FAE team at YAGEOGroup.com to begin your next breakthrough.

Author

Alexander Nebel, Technical Marketing Manager (EMEA), YAGEO Group
Mark Laps, Technical Product Manager, Ceramic PBU, YAGEO Group
Jake Michels, Associate Technical PM, Ceramic PBU, YAGEO Group