Z0805C241BSMST

Aliases (Z0805C241BSMST)

Obsolete

EMI Suppression, KEMET, Z-SMS, SMD Chip, Noise Suppression

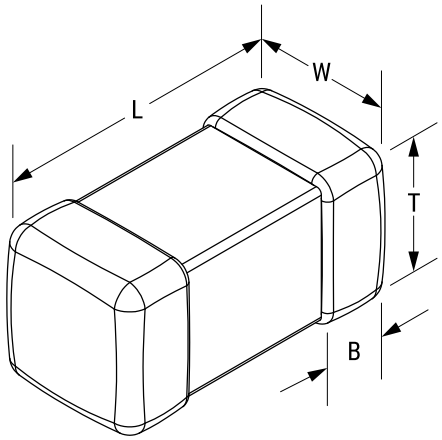

Click here for the 3D model.

General Information	
Series	Z-SMS
Style	SMD Chip
Description	Chip Bead Signal Line
Features	Increases The Z Characteristics Sharply Above 20MHz And Is Applicable For Radiated Noise In The 100MHz-300MHz Range, Especially Effective On Video Signals
RoHS	Yes
Notes	Suggested Replacement - https://productfinder.pulseelectronics.com/part/BBPY00201209221Y00.

Dimensions	
L	2mm -3mm
W	1.25mm +/-0.2mm
T	0.85mm +/-0.2mm
B	0.5mm +/-0.3mm

Specifications	
Impedance	240 Ohms (100 MHz)
Impedance Tolerance	25%
Ripple Current	600 mA (MAX)
Temperature Range	-55/+125°C
DC Resistance	0.2 Ohms

Packaging Specifications	
Packaging	T&R
Packaging Quantity	4000

Statements of suitability for certain applications are based on our knowledge of typical operating conditions for such applications, but are not intended to constitute - and we specifically disclaim - any warranty concerning suitability for a specific customer application or use. This Information is intended for use only by customers who have the requisite experience and capability to determine the correct products for their application. Any technical advice inferred from this Information or otherwise provided by us with reference to the use of our products is given gratis, and we assume no obligation or liability for the advice given or results obtained.

© 2006 - 2026 YAGEO