Z0805C220ASMST

Aliases (Z0805C220ASMST)

Obsolete

EMI Suppression, KEMET, Z-SMS, SMD Chip, Noise Suppression

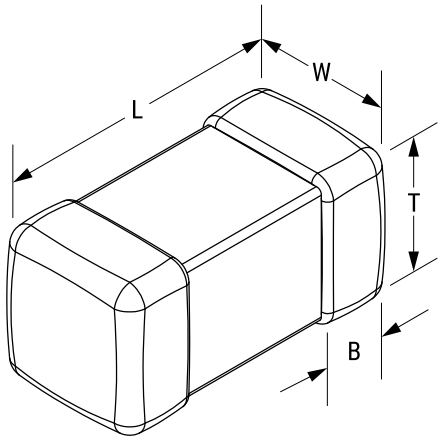

Click here for the 3D model.

General Information	
Series	Z-SMS
Style	SMD Chip
Description	Chip Bead Signal Line
Features	Suppresses The XL Component; Helps Stop The Reduction Of The Wave-Form Integrity
RoHS	Yes
Notes	Not recommended for new designs, please see Z0805C210BPWST, Z0805C250APWST for replacement.

Dimensions	
L	2mm -3mm
W	1.25mm +/-0.2mm
T	0.85mm +/-0.2mm
B	0.5mm +/-0.3mm

Packaging Specifications	
Packaging	T&R
Packaging Quantity	4000

Specifications	
Impedance	22 Ohms (100 MHz)
Impedance Tolerance	25%
Ripple Current	1200 mA (MAX)
Temperature Range	-55/+125°C
DC Resistance	0.05 Ohms

Statements of suitability for certain applications are based on our knowledge of typical operating conditions for such applications, but are not intended to constitute - and we specifically disclaim - any warranty concerning suitability for a specific customer application or use. This Information is intended for use only by customers who have the requisite experience and capability to determine the correct products for their application. Any technical advice inferred from this Information or otherwise provided by us with reference to the use of our products is given gratis, and we assume no obligation or liability for the advice given or results obtained.

© 2006 - 2026 YAGEO