# SSHB10H-R13088

Aliases (UALSB1R1308800)

Dual Mode Chokes, KEMET, SSHB10H, Through-Hole, Dual Mode

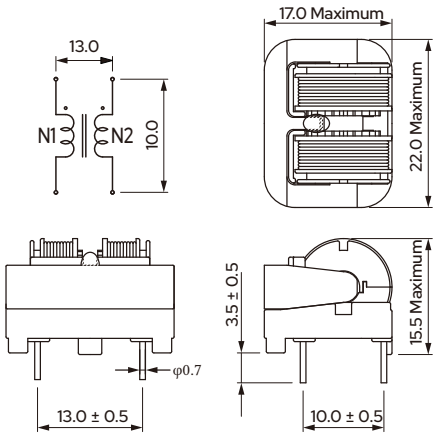


Click here for the 3D model.

| General Information | |
|---|---|
| Series | SSHB10H |
| Style | Through-Hole |
| RoHS | Yes |
| Notes | Marking: R13 Lot No. |
| Miscellaneous | Temperature Rise Maximum: 55 K. |
| Core | Mn-Zn Ferrite |

| Dimensions | |
|---|---|
| L | 22mm MAX |
| W | 17mm |
| T | 17mm MAX |
| H | 15.5mm MAX |
| LL | 3.5mm +/-0.5mm |
| S | 13mm +/-0.5mm |
| S1 | 10mm NOM |
| Wire Size | 0.37mm |
| F | 0.7mm NOM |

| Specifications | |
|---|---|
| Voltage AC | 250 VAC, 320 VAC (IEC60664-1) |
| Rated Current | 1.3 A |
| Temperature Range | -40/+120°C |
| DC Resistance | 0.28 Ohms (Per Line) |
| Inductance Common Mode | 8.8 mH |
| Inductance Differential Mode | 135 uH |

| Packaging Specifications | |
|---|---|
| Packaging | Tray |
| Packaging Quantity | 300 |
| Typical Component Weight | 10 g |

Statements of suitability for certain applications are based on our knowledge of typical operating conditions for such applications, but are not intended to constitute - and we specifically disclaim - any warranty concerning suitability for a specific customer application or use. This Information is intended for use only by customers who have the requisite experience and capability to determine the correct products for their application. Any technical advice inferred from this Information or otherwise provided by us with reference to the use of our products is given gratis, and we assume no obligation or liability for the advice given or results obtained.



© 2006 - 2026 YAGEO