SN8S-300JA

Aliases (UALSN8S300JA00)

Differential Mode Chokes - Power, KEMET, SN-JA, Through-Hole, Normal Mode, 26 uH

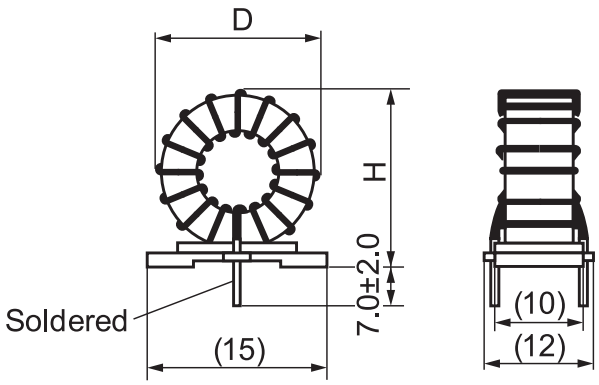

Click here for the 3D model.

General Information	
Series	SN-JA
Style	Through-Hole
RoHS	Yes
Miscellaneous	19 (K) Temperature Rise Max.
Core	Fe

Dimensions	
D	18mm MAX
L	15mm NOM
T	12mm MAX
H	18mm MAX
LL	7mm +/-2mm
S	10mm NOM
Wire Size	0.6mm

Specifications	
Inductance	26 uH
Rated Current	2 A
Temperature Range	-40/+105°C
DC Resistance	0.042 Ohms

Packaging Specifications	
Packaging	Tray
Packaging Quantity	600
Typical Component Weight	4.4 g

Statements of suitability for certain applications are based on our knowledge of typical operating conditions for such applications, but are not intended to constitute - and we specifically disclaim - any warranty concerning suitability for a specific customer application or use. This Information is intended for use only by customers who have the requisite experience and capability to determine the correct products for their application. Any technical advice inferred from this Information or otherwise provided by us with reference to the use of our products is given gratis, and we assume no obligation or liability for the advice given or results obtained.

© 2006 - 2026 YAGEO