SCT39XV-440-Z2R0B005JH

Aliases (UALCT39Z005JH0)

Common Mode Chokes - Power, KEMET, SC39XV-Z, Through-Hole, Common Mode, 187 uH, 30%

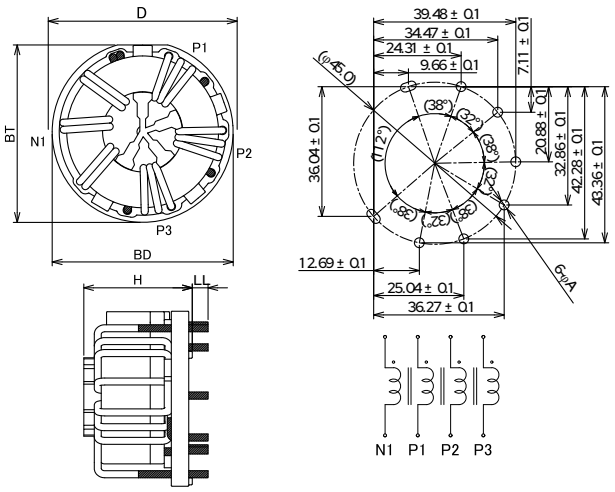

Click here for the 3D model.

General Information	
Series	SC39XV-Z
Style	Through-Hole
Features	High Impedance, High Rated Voltage
RoHS	Yes
Qualifications	AEC-Q200
Notes	Lead Spacing (S/S1) Are For Reference Only.
Miscellaneous	Temperature Rise Maximum: 50 K.
Core	Mn-Zn Ferrite

Dimensions	
D	53mm MAX
H	31mm +1/-0.6mm
LL	4.5mm +/-0.5mm
BD	51mm +/-0.5mm
BT	50mm +/-0.5mm

Packaging Specifications	
Packaging	Tray
Packaging Quantity	48
Typical Component Weight	111 g

Specifications	
Voltage AC	1000 VAC
Voltage DC	1000 VDC
Inductance	0.187 mH
Inductance Tolerance	30%
Rated Current	44 A
Temperature Range	-40/+150°C
DC Resistance	0.95 mOhms (N1), 2.64 mOhms (P1,P2,P3)

Statements of suitability for certain applications are based on our knowledge of typical operating conditions for such applications, but are not intended to constitute - and we specifically disclaim - any warranty concerning suitability for a specific customer application or use. This Information is intended for use only by customers who have the requisite experience and capability to determine the correct products for their application. Any technical advice inferred from this Information or otherwise provided by us with reference to the use of our products is given gratis, and we assume no obligation or liability for the advice given or results obtained.

© 2006 - 2026 YAGEO