SCT29XV-080-1R3A026JV

Aliases (UALCT290026JV0)

Common Mode Chokes - Power, KEMET, SC29XV, Through-Hole, Common Mode, 2,260 uH

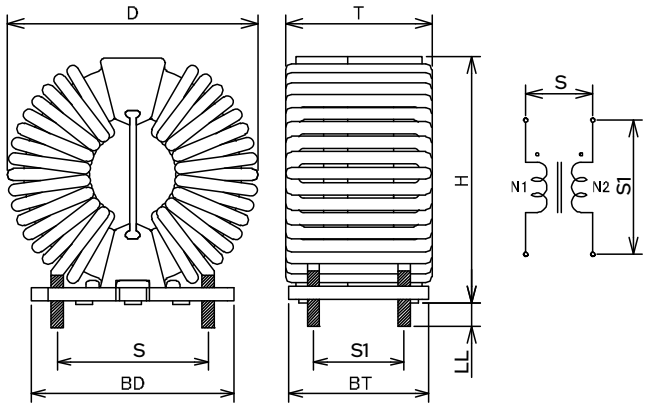

Click here for the 3D model.

General Information	
Series	SC29XV
Style	Through-Hole
Features	High Impedance, High Rated Voltage
RoHS	Yes
Qualifications	AEC-Q200
Notes	Lead Spacing (S/S1) Are For Reference Only.
Miscellaneous	Temperature Rise Maximum: 40 K.
Core	Mn-Zn Ferrite

Dimensions	
D	39mm MAX
T	21.4mm MAX
H	36.7mm +1/-0.6mm
LL	3.5mm +/-0.5mm
S	22.5mm +/-0.5mm
S1	13.5mm +/-0.5mm
Wire Size	1.3mm
BD	30.2mm +/-0.5mm
BT	20.85mm +/-0.5mm

Specifications	
Voltage AC	1000 VAC
Voltage DC	1000 VDC
Inductance	2.26 mH
Rated Current	8 A
Temperature Range	-40/+150°C
DC Resistance	14.2 mOhms

Packaging Specifications	
Packaging	Tray
Packaging Quantity	120
Typical Component Weight	45 g

Statements of suitability for certain applications are based on our knowledge of typical operating conditions for such applications, but are not intended to constitute - and we specifically disclaim - any warranty concerning suitability for a specific customer application or use. This Information is intended for use only by customers who have the requisite experience and capability to determine the correct products for their application. Any technical advice inferred from this Information or otherwise provided by us with reference to the use of our products is given gratis, and we assume no obligation or liability for the advice given or results obtained.

© 2006 - 2026 YAGEO