# SCR25XV-110-1R4A013JV

Aliases (UALCR250013JV0)

Common Mode Chokes - Power, KEMET, SC25XV, Through-Hole, Common Mode, 2,100 uH

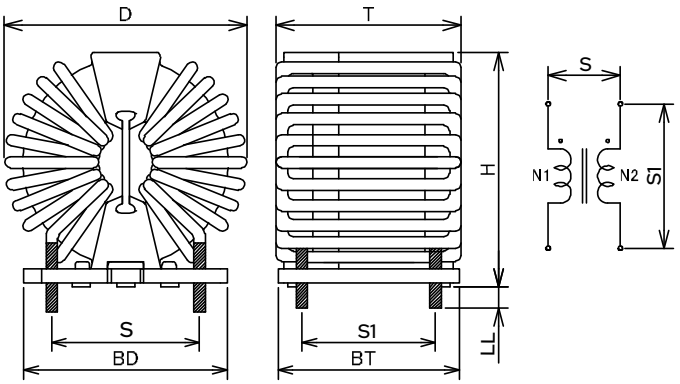


Click here for the 3D model.

| General Information | |
|---|---|
| Series | SC25XV |
| Style | Through-Hole |
| Features | High Impedance, High Rated Voltage |
| RoHS | Yes |
| Qualifications | AEC-Q200 |
| Notes | Lead Spacing (S/S1) Are For Reference Only. |
| Miscellaneous | Temperature Rise Maximum: 45 K. |
| Core | Mn-Zn Ferrite |

| Dimensions | |
|---|---|
| D | 35.5mm MAX |
| T | 26mm MAX |
| H | 32.5mm +1/-0.6mm |
| LL | 3.5mm +/-0.5mm |
| S | 20.5mm +/-0.5mm |
| S1 | 18.5mm +/-0.5mm |
| Wire Size | 1.4mm |
| BD | 28.2mm +/-0.5mm |
| BT | 25.50mm +/-0.5mm |

| Specifications | |
|---|---|
| Voltage AC | 1000 VAC |
| Voltage DC | 1000 VDC |
| Inductance | 2.1 mH |
| Rated Current | 11 A |
| Temperature Range | -40/+120°C |
| DC Resistance | 7.72 mOhms |

| Packaging Specifications | |
|---|---|
| Packaging | Tray |
| Packaging Quantity | 140 |
| Typical Component Weight | 46.8 g |

Statements of suitability for certain applications are based on our knowledge of typical operating conditions for such applications, but are not intended to constitute - and we specifically disclaim - any warranty concerning suitability for a specific customer application or use. This Information is intended for use only by customers who have the requisite experience and capability to determine the correct products for their application. Any technical advice inferred from this Information or otherwise provided by us with reference to the use of our products is given gratis, and we assume no obligation or liability for the advice given or results obtained.



© 2006 - 2026 YAGEO