SCR22-050-0R9A100J

Aliases (UALCA0R9A100J0)

Common Mode Chokes - Power, KEMET, SCR22, Through-Hole, Common Mode, 0.01 H

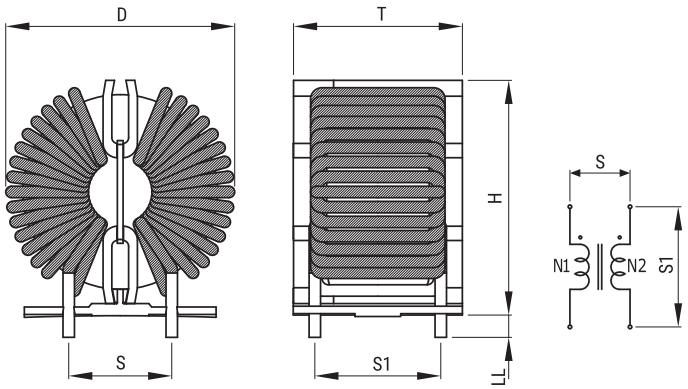

Click here for the 3D model.

General Information	
Series	SCR22
Style	Through-Hole
Features	High Impedance, Space Saving
RoHS	Yes
Miscellaneous	65 (K) Temperature Rise Max.
Core	Mn-Zn Ferrite

Dimensions	
D	32mm MAX
T	24mm MAX
H	31mm MAX
LL	5mm +/-2mm
S	18mm NOM
S1	16mm NOM
Wire Size	0.9mm

Specifications	
Voltage AC	250 VAC
Voltage DC	250 VDC
Inductance	10 mH
Rated Current	5 A
Temperature Range	-40/+120°C
DC Resistance	60 mOhms

Packaging Specifications	
Typical Component Weight	34 g

Statements of suitability for certain applications are based on our knowledge of typical operating conditions for such applications, but are not intended to constitute - and we specifically disclaim - any warranty concerning suitability for a specific customer application or use. This Information is intended for use only by customers who have the requisite experience and capability to determine the correct products for their application. Any technical advice inferred from this Information or otherwise provided by us with reference to the use of our products is given gratis, and we assume no obligation or liability for the advice given or results obtained.

© 2006 - 2026 YAGEO