SBT-0260TF

Aliases (UDLSBT00260TF0)

Differential Mode Chokes - Signal, KEMET, SBT, Through-Hole, Normal Mode, 60 uH, 35%

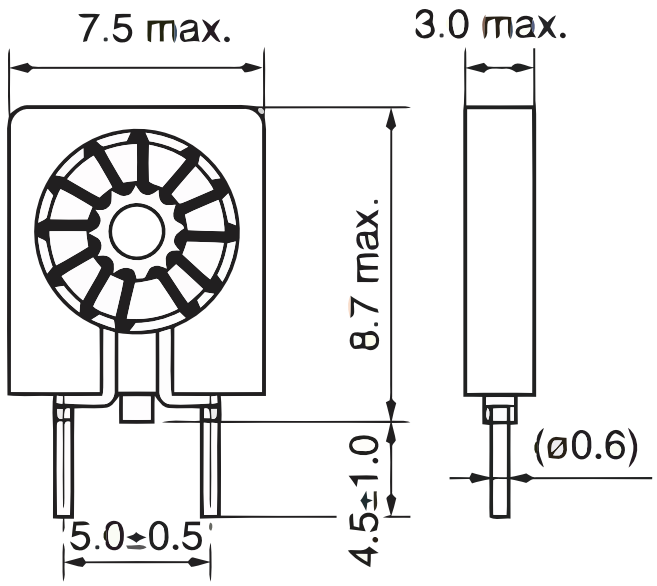

Click here for the 3D model.

General Information	
Series	SBT
Style	Through-Hole
RoHS	Yes
Miscellaneous	Inductance: 70mAmps (1kHz).

Dimensions	
L	7.5mm MAX
W	3mm MAX
T	3mm MAX
H	8.7mm MAX
LL	4.5mm +/-1mm
S	5mm +/-0.5mm

Specifications	
Voltage DC	50 VDC
Inductance	60 uH
Inductance Tolerance	35%
Temperature Range	-25/+70°C
DC Resistance	50 mOhms (per Line MAX)

Packaging Specifications	
Packaging	T&R
Packaging Quantity	1000
Typical Component Weight	260 mg

Statements of suitability for certain applications are based on our knowledge of typical operating conditions for such applications, but are not intended to constitute - and we specifically disclaim - any warranty concerning suitability for a specific customer application or use. This Information is intended for use only by customers who have the requisite experience and capability to determine the correct products for their application. Any technical advice inferred from this Information or otherwise provided by us with reference to the use of our products is given gratis, and we assume no obligation or liability for the advice given or results obtained.

© 2006 - 2026 YAGEO