PHH223HML4470ME4

PHH223, Hybrid Polymer, 4,700 uF, 20%, 25 VDC, -40/+125°C

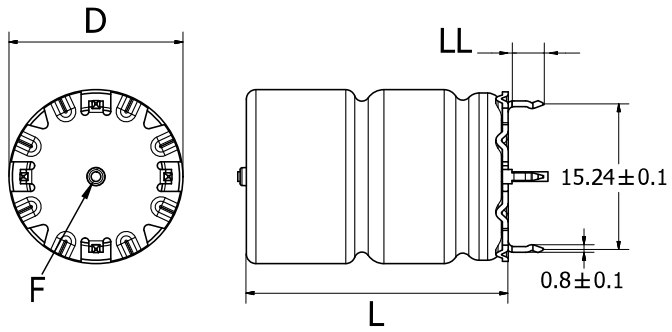

General Information	
Series	PHH223
Dielectric	Hybrid Polymer
Style	Radial Crown
Description	Hybrid Radial Crown Capacitors
RoHS	Yes
Lead	Radial Crown
Qualifications	AEC-Q200
Halogen Free	Yes
Typical Component Weight	13 g
Shelf Life	520 Weeks

Click here for the 3D model.

Dimensions	
D	20.2mm +/-0.5mm
L	27.7mm +/-1mm
LL	3.3mm +/-0.5mm
F	1mm +/-0.03mm

Packaging Specifications	
Packaging	Tray

Specifications	
Capacitance	4,700 uF
Tolerance	20%
Voltage DC	25 VDC
Temperature Range	-40/+125°C
Rated Temperature	125°C
Life	3000 Hrs (Rated Voltage At 105C), 2000 Hrs (Rated Voltage At 125C)
ESR	54 mOhms (100Hz 20C), 3.8 mOhms (100kHz -40C to 125C)
Ripple Current	48 Amps (100kHz 90C), 45 Amps (100kHz 105C), 31.5 Amps (100kHz 125C)
Leakage Current	587.5 uA

Statements of suitability for certain applications are based on our knowledge of typical operating conditions for such applications, but are not intended to constitute - and we specifically disclaim - any warranty concerning suitability for a specific customer application or use. This Information is intended for use only by customers who have the requisite experience and capability to determine the correct products for their application. Any technical advice inferred from this Information or otherwise provided by us with reference to the use of our products is given gratis, and we assume no obligation or liability for the advice given or results obtained.

© 2006 - 2026 YAGEO