PHA225MKP3370QE4

PHA225, Hybrid Polymer, 370 uF, -10/+30%, 63 VDC, -40/+125°C

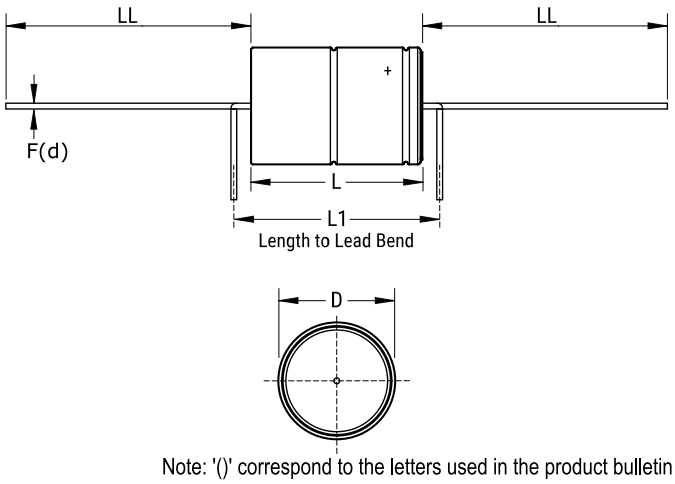

Note: '()' correspond to the letters used in the product bulletin

Click here for the 3D model.

General Information	
Series	PHA225
Dielectric	Hybrid Polymer
Style	Axial
Description	Hybrid Axial Capacitors
RoHS	Yes
Lead	Wire Leads
Qualifications	AEC-Q200
Halogen Free	Yes
Typical Component Weight	11 g
Shelf Life	520 Weeks

Dimensions	
D	16.2mm +/-0.5mm
L	34.7mm +/-1mm
L1	41mm MIN
LL	40mm +/-2mm
F	1mm +/-0.03mm

Packaging Specifications	
Packaging	Tray

Specifications	
Capacitance	370 uF
Tolerance	-10/+30%
Voltage DC	63 VDC
Temperature Range	-40/+125°C
Rated Temperature	125°C
ESR	145 mOhms (100Hz 20C), 6.1 mOhms (100kHz 125C)
Ripple Current	39.5 Amps (100kHz 70C), 33.1 Amps (100kHz 90C), 26.5 Amps (100kHz 105C), 16.2 Amps (100kHz 125C)
Leakage Current	116.5 uA (5min 20°C)

Statements of suitability for certain applications are based on our knowledge of typical operating conditions for such applications, but are not intended to constitute - and we specifically disclaim - any warranty concerning suitability for a specific customer application or use. This Information is intended for use only by customers who have the requisite experience and capability to determine the correct products for their application. Any technical advice inferred from this Information or otherwise provided by us with reference to the use of our products is given gratis, and we assume no obligation or liability for the advice given or results obtained.

© 2006 - 2026 YAGEO