PHA224HLP4480ME4

PHA224, Hybrid Polymer, 4,800 uF, 20%, 25 VDC, -40/+150°C

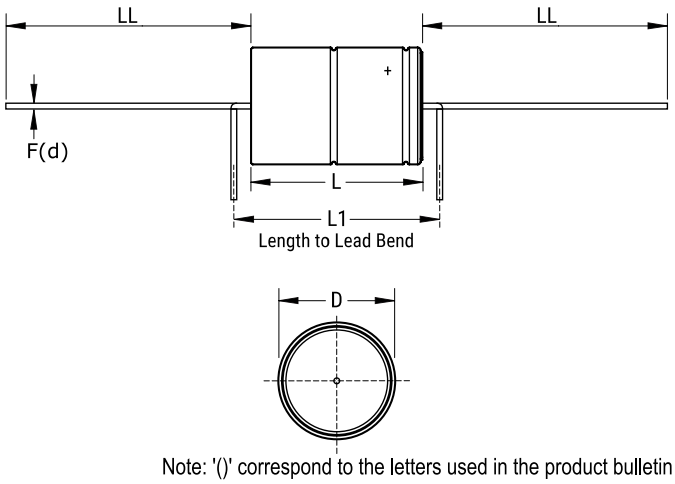

Note: '()' correspond to the letters used in the product bulletin

Click here for the 3D model.

General Information	
Series	PHA224
Dielectric	Hybrid Polymer
Style	Axial
Description	Hybrid Axial Capacitors
RoHS	Yes
Lead	Wire Leads
Qualifications	AEC-Q200
Halogen Free	Yes
Typical Component Weight	16 g
Shelf Life	520 Weeks

Dimensions	
D	18.2mm +/-0.5mm
L	34.7mm +/-1mm
L1	16mm MIN
LL	40mm +/-2mm
F	1mm +/-0.03mm

Packaging Specifications	
Packaging	Tray

Specifications	
Capacitance	4,800 uF
Tolerance	20%
Voltage DC	25 VDC
Temperature Range	-40/+150°C
Rated Temperature	150°C
ESR	47 mOhms (100Hz 20C), 3.7 mOhms (100kHz -40C to 125C)
Ripple Current	40.1 Amps (100kHz 105C), 27.6 Amps (100kHz 125C), 13.9 Amps (100kHz 145C)
Leakage Current	600 uA

Statements of suitability for certain applications are based on our knowledge of typical operating conditions for such applications, but are not intended to constitute - and we specifically disclaim - any warranty concerning suitability for a specific customer application or use. This Information is intended for use only by customers who have the requisite experience and capability to determine the correct products for their application. Any technical advice inferred from this Information or otherwise provided by us with reference to the use of our products is given gratis, and we assume no obligation or liability for the advice given or results obtained.

© 2006 - 2026 YAGEO