OHD3-70B

Aliases (USEO370B000000)

KEMET, OHD, Thermal Reed Switch, Radial Tab, 5C Temperature Accuracy, High Reliability, High-Speed Response, Long Operational Life, Excellent Environmental Durability, High Temperature Accuracy, 70°C, Break

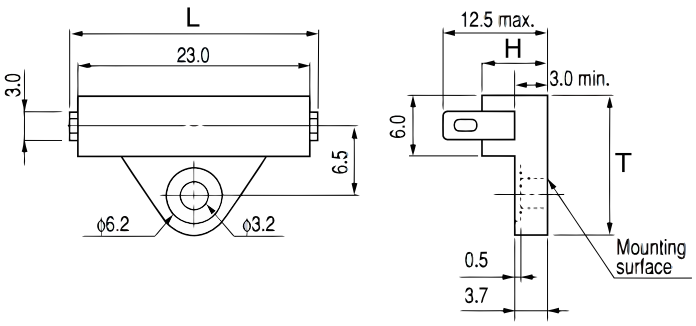

Click here for the 3D model.

General Information	
Series	OHD
Type	Thermal Reed Switch
Style	Radial Tab
Description	Thermal Guard
Features	High Reliability, High-Speed Response, Long Operational Life, Excellent Environmental Durability, High Temperature Accuracy
Lead	Tab Leads
RoHS	Yes
REACH	Yes
Qualifications	UL, CSA, TUV

Dimensions	
L	27mm MAX
H	6mm
T	13.5mm

Packaging Specifications	
Packaging	Tray, Box
Packaging Quantity	1000
Typical Component Weight	2.4 g

Specifications	
Switching Temp.	70C +/-5C
Temperature Range	-20/+150°C
Contact Type	Break
Voltage DC	110 VDC MAX (Opening/Closing), 2500 VAC/1 minute or 3000 VAC/1 second
Current	0.3 Amps AC/DC MAX (Opening/Closing), 0.1 mAmps MIN (1VDC, Opening/Closing)
ESR	150 mOhms MAX (Contact Resistance)
Max Opening/Closing Power	6 (AC/DC)
Max Opening/Closing Voltage	110 (AC/DC)
Differential Temperature	10C Maximum

Statements of suitability for certain applications are based on our knowledge of typical operating conditions for such applications, but are not intended to constitute - and we specifically disclaim - any warranty concerning suitability for a specific customer application or use. This Information is intended for use only by customers who have the requisite experience and capability to determine the correct products for their application. Any technical advice inferred from this Information or otherwise provided by us with reference to the use of our products is given gratis, and we assume no obligation or liability for the advice given or results obtained.

© 2006 - 2026 YAGEO