ND10X2N6

Aliases (UPCND0A0100200)

KEMET, ND, Piezo Ceramic Transducers, Single-layer

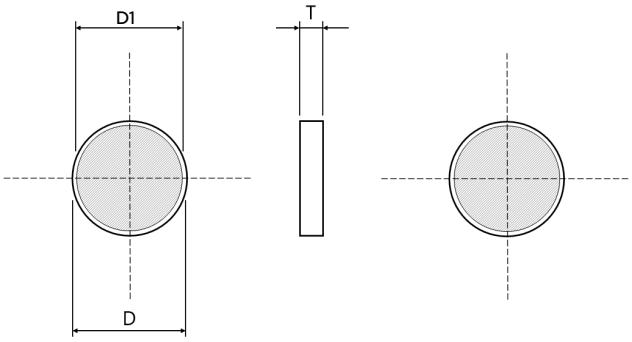

Click here for the 3D model.

General Information	
Style	Bolt-On
Description	Piezo Ceramic
RoHS	With Exemptions
REACH	SVHC (PZT – CAS 12626-81-2)

Dimensions	
D	10mm +/-0.1mm
T	2mm +/-0.1mm

Packaging Specifications	
Typical Component Weight	1.2
Packaging Quantity	1

Specifications	
Series	ND
Capacitance	480 pF
Resonant Frequency	216 kHz
Temperature Range	-20/+60°C

Statements of suitability for certain applications are based on our knowledge of typical operating conditions for such applications, but are not intended to constitute - and we specifically disclaim - any warranty concerning suitability for a specific customer application or use. This Information is intended for use only by customers who have the requisite experience and capability to determine the correct products for their application. Any technical advice inferred from this Information or otherwise provided by us with reference to the use of our products is given gratis, and we assume no obligation or liability for the advice given or results obtained.

© 2006 - 2026 YAGEO