MR-2043

Aliases (UNFMR2043XXXXX)

EMI Filters, KEMET, MR, Plastic Box, Noise Suppression

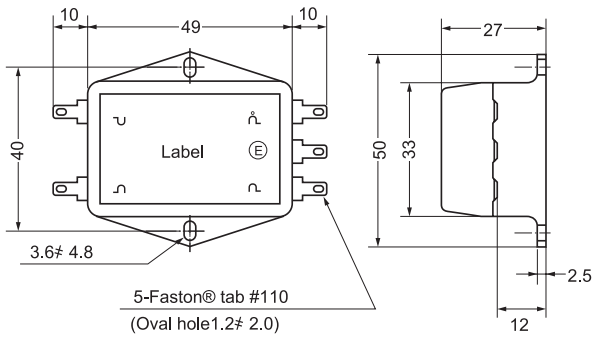

Click here for the 3D model.

General Information	
Series	MR
Style	Plastic Box
Description	Noise Filters
RoHS	Yes
Qualifications	UL, CSA, TUV
Miscellaneous	30 K Self-Temperature Rise Max.
Lead	Fast On
Terminal Type	Faston

Dimensions	
L	49mm NOM
W	40mm NOM
H	27mm NOM
Lead	Fast On

Packaging Specifications	
Packaging	Tray, Box
Packaging Quantity	100
Typical Component Weight	45 g

Specifications	
Voltage AC	250 VAC
Voltage	1500 VAC Withstanding Voltage 1 Min. Line to Ground
Rated Current	4 A (AC/DC)
Ripple Current	4 A (AC/DC)
Temperature Range	-20/+60°C
Leakage Current	0.75 mA
ESR	300 MOhms MIN Insulation 500 VDC 1 Min. Line To Ground

Statements of suitability for certain applications are based on our knowledge of typical operating conditions for such applications, but are not intended to constitute - and we specifically disclaim - any warranty concerning suitability for a specific customer application or use. This Information is intended for use only by customers who have the requisite experience and capability to determine the correct products for their application. Any technical advice inferred from this Information or otherwise provided by us with reference to the use of our products is given gratis, and we assume no obligation or liability for the advice given or results obtained.

© 2006 - 2026 YAGEO