M39014/02-1276

Aliases (C062T224K5X5CP, CKR06BX224KP)

LDD Mil X7R PRF39014, Ceramic, 0.22 uF, 10%, 50 VDC, BX, P (0.1%/1000 Hrs), 5.08 mm

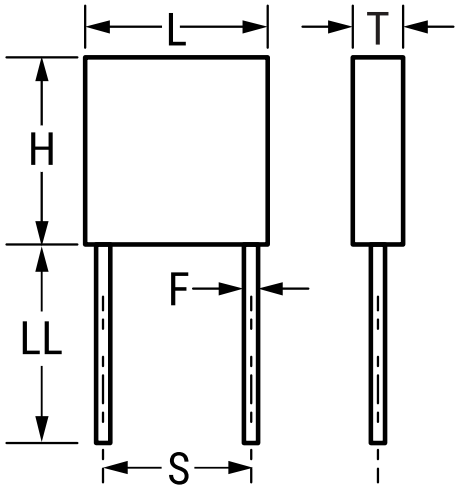

Click here for the 3D model.

General Information	
Series	LDD Mil X7R PRF39014
Style	Radial
RoHS	No
Prop 65	**WARNING:** Cancer and reproductive harm - https://www.p65warnings.ca.gov./
SCIP Number	8c864fd1-202b-4ce7-85fd-56c9e19121ad
Termination	Lead (SnPb)
Failure Rate	P (0.1%/1000 Hrs)
Testing and Reliability	MIL-PRF-39014
Qualifications	MIL-PRF-39014
Notes	Lead Length Shown Is For Parts Supplied In Bulk, See Packaging Specifications For Lead Lengths When Not Provided In Bulk.

Dimensions	
L	7.37mm +/-0.25mm
H	7.37mm +/-0.25mm
T	2.29mm +/-0.25mm
S	5.08mm +/-0.38mm
LL	31.75mm MIN
F	0.635mm +0.102/-0.051mm

Packaging Specifications	
Packaging	Bulk, Bag
Packaging Quantity	100

Specifications	
Capacitance	0.22 uF
Tolerance	10%
Voltage DC	50 VDC
Dielectric Withstanding Voltage	125 VDC
Temperature Range	-55/+125°C
Temp. Coefficient	BX
Dissipation Factor	2.5%
Insulation Resistance	4.5 GOhms

Statements of suitability for certain applications are based on our knowledge of typical operating conditions for such applications, but are not intended to constitute - and we specifically disclaim - any warranty concerning suitability for a specific customer application or use. This Information is intended for use only by customers who have the requisite experience and capability to determine the correct products for their application. Any technical advice inferred from this Information or otherwise provided by us with reference to the use of our products is given gratis, and we assume no obligation or liability for the advice given or results obtained.

© 2006 - 2026 YAGEO