M3253505E2Z105KZMB

Aliases (C1206K105K3RML)

SMD MIL X7R PRF32535, Ceramic, 1 uF, 10%, 25 VDC, X7R, SMD, MIL-PRF-32535, N/A, 1206 / 3216

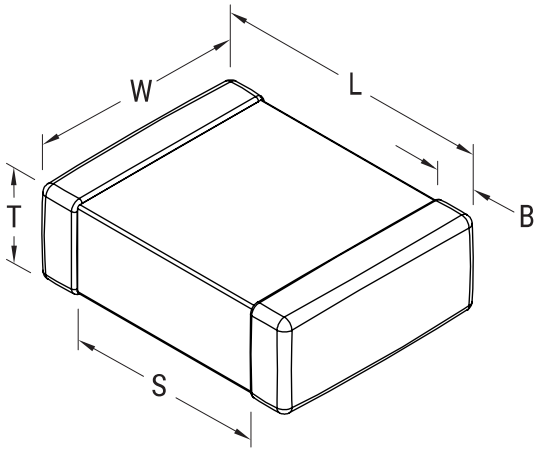

Click here for the 3D model.

General Information	
Series	SMD MIL X7R PRF32535
Style	SMD Chip
Description	SMD, MIL-PRF-32535
RoHS	No
Prop 65	**WARNING:** Cancer and reproductive harm - https://www.p65warnings.ca.gov./
SCIP Number	d66873f5-e54d-410c-a0cf-ebf6fcf635b5
Termination	Solder Plated
Failure Rate	N/A
Qualifications	MIL-PRF-32535 M-Level
Typical Component Weight	57 mg
Shelf Life	78 Weeks
MSL	1

Dimensions	
L	3.2mm +0.3/-0.25mm
W	1.6mm +0.3/-0.25mm
T	1.8mm MAX
S	1.5mm MIN
B	0.51mm +/-0.36mm
Case Code (EIA / mm)	1206 / 3216

Packaging Specifications	
Packaging	Waffle
Packaging Quantity	80

Specifications	
Capacitance	1 uF
Tolerance	10%
Voltage DC	25 VDC
Dielectric Withstanding Voltage	62.5 VDC
Temperature Range	-55/+125°C
Temp. Coefficient	X7R
Capacitance Change with Reference to +25°C and 0 VDC Applied (TCC)	15%, 1kHz 1.0Vrms
Dissipation Factor	3.5% 1 kHz 1.0Vrms
Aging Rate	3% Loss/Decade Hour
Insulation Resistance	1 GOhms

Statements of suitability for certain applications are based on our knowledge of typical operating conditions for such applications, but are not intended to constitute - and we specifically disclaim - any warranty concerning suitability for a specific customer application or use. This Information is intended for use only by customers who have the requisite experience and capability to determine the correct products for their application. Any technical advice inferred from this Information or otherwise provided by us with reference to the use of our products is given gratis, and we assume no obligation or liability for the advice given or results obtained.

© 2006 - 2026 YAGEO