# M3253503E2A473KZMB

Aliases (C0603K473K5RML)

SMD MIL X7R PRF32535, Ceramic, 0.047 uF, 10%, 50 VDC, X7R, SMD, MIL-PRF-32535, N/A, 0603 / 1608

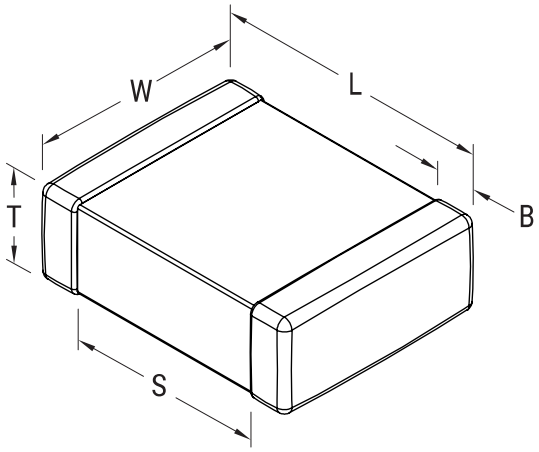


Click here for the 3D model.

| General Information | |
|---|---|
| Series | SMD MIL X7R PRF32535 |
| Style | SMD Chip |
| Description | SMD, MIL-PRF-32535 |
| RoHS | No |
| Prop 65 | **WARNING:** Cancer and reproductive harm - https://www.p65warnings.ca.gov./ |
| SCIP Number | d66873f5-e54d-410c-a0cf-ebf6fcf635b5 |
| Termination | Solder Plated |
| Failure Rate | N/A |
| Qualifications | MIL-PRF-32535 M-Level |
| Typical Component Weight | 6.3 mg |
| Shelf Life | 78 Weeks |
| MSL | 1 |

| Dimensions | |
|---|---|
| L | 1.6mm +0.2/-0.15mm |
| W | 0.81mm +0.2/-0.15mm |
| T | 1.02mm MAX |
| S | 0.5mm MIN |
| B | 0.41mm +/-0.2mm |
| Case Code (EIA / mm) | 0603 / 1608 |

| Packaging Specifications | |
|---|---|
| Packaging | Waffle |
| Packaging Quantity | 100 |

| Specifications | |
|---|---|
| Capacitance | 0.047 uF |
| Tolerance | 10% |
| Voltage DC | 50 VDC |
| Dielectric Withstanding Voltage | 125 VDC |
| Temperature Range | -55/+125°C |
| Temp. Coefficient | X7R |
| Capacitance Change with Reference to +25°C and 0 VDC Applied (TCC) | 15%, 1kHz 1.0Vrms |
| Dissipation Factor | 2.5% 1 kHz 1.0Vrms |
| Aging Rate | 3% Loss/Decade Hour |
| Insulation Resistance | 21.2766 GOhms |

Statements of suitability for certain applications are based on our knowledge of typical operating conditions for such applications, but are not intended to constitute - and we specifically disclaim - any warranty concerning suitability for a specific customer application or use. This Information is intended for use only by customers who have the requisite experience and capability to determine the correct products for their application. Any technical advice inferred from this Information or otherwise provided by us with reference to the use of our products is given gratis, and we assume no obligation or liability for the advice given or results obtained.



© 2006 - 2026 YAGEO