M3253502E2Y103KZTB

Aliases (C0402K103K4RTL)

SMD MIL X7R PRF32535, Ceramic, 0.01 uF, 10%, 16 VDC, X7R, SMD, MIL-PRF-32535, N/A, 0402 / 1005

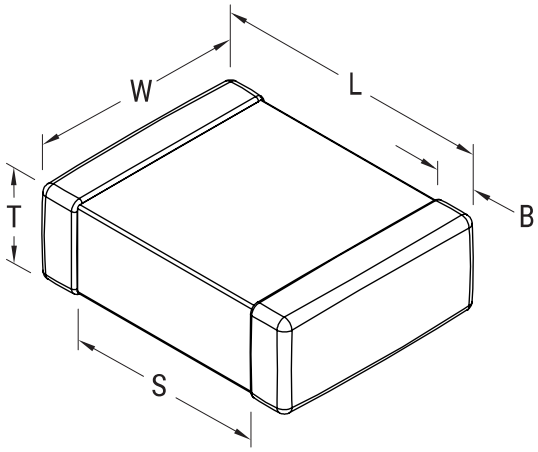

Click here for the 3D model.

General Information	
Series	SMD MIL X7R PRF32535
Style	SMD Chip
Description	SMD, MIL-PRF-32535
RoHS	No
Prop 65	**WARNING:** Cancer and reproductive harm - https://www.p65warnings.ca.gov./
SCIP Number	d66873f5-e54d-410c-a0cf-ebf6fcf635b5
Termination	Solder Plated
Failure Rate	N/A
Qualifications	MIL-PRF-32535 T-Level
Typical Component Weight	1.6 mg
Shelf Life	78 Weeks
MSL	1

Dimensions	
L	1.02mm +0.15/-0.1mm
W	0.51mm +0.13/-0.1mm
T	0.64mm MAX
S	0.3mm MIN
B	0.1mm MIN
Case Code (EIA / mm)	0402 / 1005

Packaging Specifications	
Packaging	Waffle
Packaging Quantity	368

Specifications	
Capacitance	0.01 uF
Tolerance	10%
Voltage DC	16 VDC
Dielectric Withstanding Voltage	40 VDC
Temperature Range	-55/+125°C
Temp. Coefficient	X7R
Capacitance Change with Reference to +25°C and 0 VDC Applied (TCC)	15%, 1kHz 1.0Vrms
Dissipation Factor	3.5% 1 kHz 1.0Vrms
Aging Rate	3% Loss/Decade Hour
Insulation Resistance	50 GOhms

Statements of suitability for certain applications are based on our knowledge of typical operating conditions for such applications, but are not intended to constitute - and we specifically disclaim - any warranty concerning suitability for a specific customer application or use. This Information is intended for use only by customers who have the requisite experience and capability to determine the correct products for their application. Any technical advice inferred from this Information or otherwise provided by us with reference to the use of our products is given gratis, and we assume no obligation or liability for the advice given or results obtained.

© 2006 - 2026 YAGEO