L1008C2R2MDMIT

Aliases (L1008C2R2MDMIT)

Obsolete

KEMET, L-DMI, Ferrite, 20%, 2,200 nH

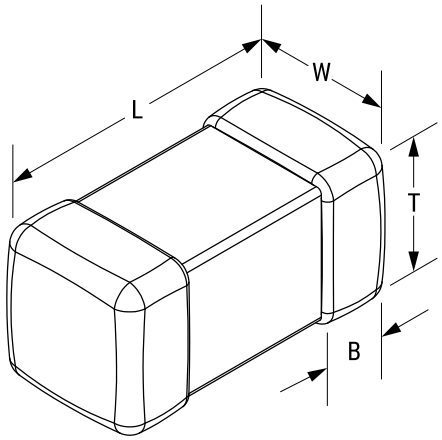

Click here for the 3D model.

General Information	
Series	L-DMI
Style	SMD Multi-Layer
Core	Ferrite
Description	Shielded, Surface Mount Inductor
Features	High Current Type For Power Supply Line
RoHS	Yes
Winding Type	Multilayer
Notes	Suggested Replacement - https://www.chilisin.com/en-global/Inductor/Product/BKPB_252010/BKPB002520102R2MA2.

Dimensions	
L	2.5mm +/-0.2mm
W	2mm +/-0.2mm
T	1mm MAX

Packaging Specifications	
Packaging	T&R
Packaging Quantity	3000

Specifications	
Inductance	2.2 uH (1 MHz)
Inductance Tolerance	20%
Rated Current	1300 mAmps (MAX)
Temperature Range	-40/+85°C
Shielded	Yes
DC Resistance	90 mOhms
DC Resistance	0.09 Ohms (Max)

Statements of suitability for certain applications are based on our knowledge of typical operating conditions for such applications, but are not intended to constitute - and we specifically disclaim - any warranty concerning suitability for a specific customer application or use. This Information is intended for use only by customers who have the requisite experience and capability to determine the correct products for their application. Any technical advice inferred from this Information or otherwise provided by us with reference to the use of our products is given gratis, and we assume no obligation or liability for the advice given or results obtained.

© 2006 - 2026 YAGEO