FG-R04-4BA

Aliases (USETR044BAA000)

KEMET, FG-R04, Current, Through-Hole, Residual Current, Open-loop, Fluxgate-Based Current Detection, PCB Mounting

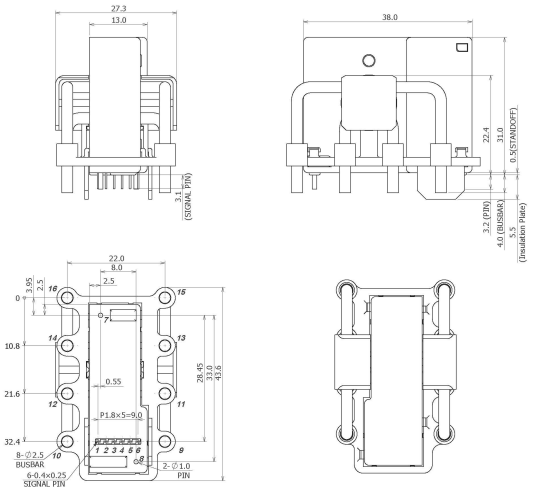

Click here for the 3D model.

General Information	
Series	FG-R04
Type	Current
Style	Through-Hole
Description	Fluxgate-Based Residual Current Sensor
Features	Open-loop, Fluxgate-Based Current Detection, PCB Mounting
Lead	6 Pin
RoHS	Yes
REACH	Yes
Qualifications	IEC
Storage Temperature Range	-40/+105°C

Dimensions	
L	31mm MAX
W	43.6mm MAX
T	27.3mm MAX
LL	3.2mm MAX

Packaging Specifications	
Packaging	Tray, Box
Packaging Quantity	150
Typical Component Weight	32 g

Specifications	
Temperature Range	-40/+105°C
Voltage DC	2.25 V (PIN3, Analog Output; typical)
Power Supply Voltage	5 V +/- 5%
Current	6 mA (MAX; DC Detection), 30 mArms (MAX, 55 Hz; AC Detection)
Sensitivity	40 V/A (PIN3, AOUT; typical)
Frequency Range	150 Hz MAX (at -3 dB; PIN3 AOUT)
Measuring Range	+/-50 mA
AC Alarm Response Time	60 typical, 250 maximum (ms, @30 mArms); 20 typical, 100 maximum (ms, @60 mArms); 8 typical, 15 maximum (ms, @150 mArms); 7 typical, 10 maximum (ms, > 5 Arms)
DC Alarm Response Time	280 typical, 1000 maximum (ms, @6 mA); 24 typical, 250 maximum (ms, @60 mA); 6 typical, 15 maximum (ms, @300 mA)

Statements of suitability for certain applications are based on our knowledge of typical operating conditions for such applications, but are not intended to constitute - and we specifically disclaim - any warranty concerning suitability for a specific customer application or use. This Information is intended for use only by customers who have the requisite experience and capability to determine the correct products for their application. Any technical advice inferred from this Information or otherwise provided by us with reference to the use of our products is given gratis, and we assume no obligation or liability for the advice given or results obtained.

© 2006 - 2026 YAGEO