F863DE474K310R

F863, Film, Metallized Polypropylene, Automotive Safety, 0.47 uF, 10%, 310 VAC (X2), 110°C, 22.5 mm

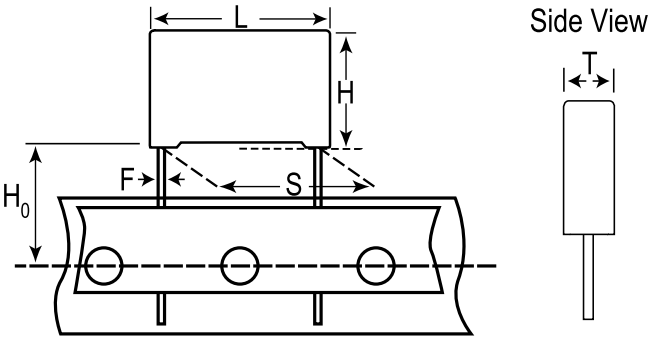

Click here for the 3D model.

General Information	
Series	F863
Dielectric	Metallized Polypropylene
Style	Radial
Features	MKP EMI, Automotive Grade, Harsh Environmental Conditions
RoHS	Yes
Termination	Tinned Wire
Lead	Wire Leads
Safety Class	X2
Qualifications	ENEC, UL, cUL, CQC, AEC-Q200
THB Performance	Yes
Typical Component Weight	3.8 g
Shelf Life	104 Weeks

Dimensions	
L	26.5mm +0.3/-0.5mm
H	16mm +0.1/-0.5mm
T	7mm +0.2/-0.5mm
S	22.5mm +/-0.4mm
H0	18.5mm +/-0.5mm
F	0.8mm +/-0.05mm

Packaging Specifications	
Packaging	Ammo
Packaging Quantity	380

Specifications	
Capacitance	0.47 uF
Tolerance	10%
Voltage AC	310 VAC (X2)
Temperature Range	-40/+110°C
Rated Temperature	110°C
Dissipation Factor	0.2% 1kHz
Insulation Resistance	21.2766 GOhms
Max dV/dt	200 V/us

Statements of suitability for certain applications are based on our knowledge of typical operating conditions for such applications, but are not intended to constitute - and we specifically disclaim - any warranty concerning suitability for a specific customer application or use. This Information is intended for use only by customers who have the requisite experience and capability to determine the correct products for their application. Any technical advice inferred from this Information or otherwise provided by us with reference to the use of our products is given gratis, and we assume no obligation or liability for the advice given or results obtained.

© 2006 - 2026 YAGEO