EXV686M035A9HAA

EXV, Aluminum Electrolytic, 68 uF, 20%, 35 VDC, -55/+105°C

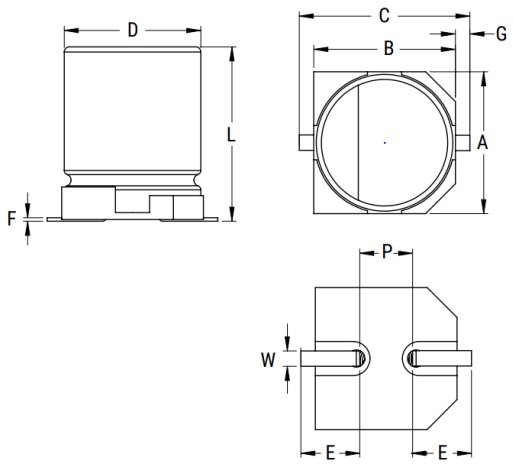

Click here for the 3D model.

General Information	
Series	EXV
Dielectric	Aluminum Electrolytic
Style	SMD Can
Description	Surface Mount, Aluminum Electrolytic
Features	Ultra Low Impedance
RoHS	Yes
Lead	V-Chip

Dimensions	
D	6.3mm +/-0.5mm
L	7.7mm +/-0.3mm
W	0.65mm +/-0.1mm
F	0.3mm MAX
A	6.6mm +/-0.2mm
B	6.6mm +/-0.2mm
C	7.8mm MAX
E	2.4mm +/-0.2mm
G	0.35mm +0.15/-0.2mm
P	2.1mm +/-0.2mm

Packaging Specifications	
Packaging	T&R, 380mm

Specifications	
Capacitance	68 uF
Tolerance	20%
Voltage DC	35 VDC, 44 VDC (Surge)
Temperature Range	-55/+105°C
Rated Temperature	105°C
Life	3000 Hrs
Dissipation Factor	12%
Ripple Current	280 mAmps (100kHz 105C), 196 mAmps (120Hz 85C)
Ripple Current at 120Hz	0.196
High Temperature Solder	Yes
Leakage Current	23.8 uA (2min 20°C)
Impedance Ratio at -25C	2
Impedance Ratio at -40C	3

Statements of suitability for certain applications are based on our knowledge of typical operating conditions for such applications, but are not intended to constitute - and we specifically disclaim - any warranty concerning suitability for a specific customer application or use. This Information is intended for use only by customers who have the requisite experience and capability to determine the correct products for their application. Any technical advice inferred from this Information or otherwise provided by us with reference to the use of our products is given gratis, and we assume no obligation or liability for the advice given or results obtained.

© 2006 - 2026 YAGEO