ELH478M035AQ2AA

ELH, Aluminum Electrolytic, 4,700 uF, 20%, 35 VDC, -40/+85°C, 10 mm

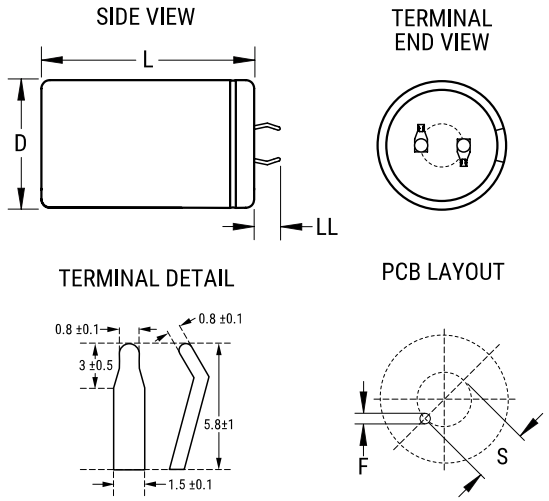

Click here for the 3D model.

General Information	
Series	ELH
Dielectric	Aluminum Electrolytic
Description	Snap-In, Aluminum Electrolytic
RoHS	Yes
Lead	2 Pin

Dimensions	
D	22mm +/-1mm
L	30mm +/-2mm
S	10mm +/-0.5mm
LL	5.8mm +/-1mm
F	2mm +/-0.1mm

Packaging Specifications	
Packaging	Bulk, Bag

Specifications	
Capacitance	4,700 uF
Tolerance	20%
Voltage DC	35 VDC, 44 VDC (Surge)
Temperature Range	-40/+85°C
Rated Temperature	85°C
Life	2000 Hrs
Dissipation Factor	35% 120Hz 20C
ESR	0.0988 Ohms (120Hz 20C)
Ripple Current	2.4 Amps (120Hz 85C)
Leakage Current	3 mA (5min 20°C)

Statements of suitability for certain applications are based on our knowledge of typical operating conditions for such applications, but are not intended to constitute - and we specifically disclaim - any warranty concerning suitability for a specific customer application or use. This Information is intended for use only by customers who have the requisite experience and capability to determine the correct products for their application. Any technical advice inferred from this Information or otherwise provided by us with reference to the use of our products is given gratis, and we assume no obligation or liability for the advice given or results obtained.

© 2006 - 2026 YAGEO