# ELH158M200AT4AA

ELH, Aluminum Electrolytic, 1,500 uF, 20%, 200 VDC, -25/+85°C, 10 mm

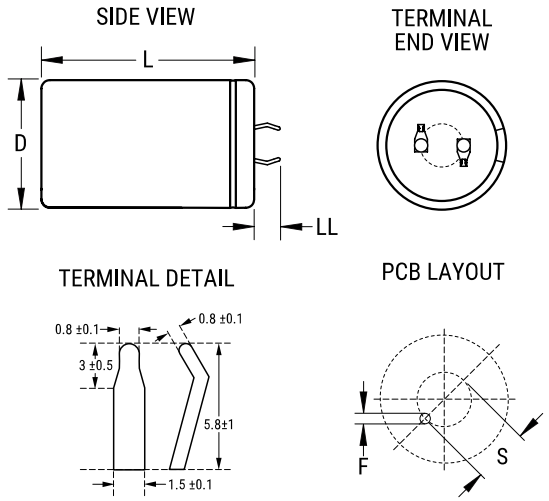


Click here for the 3D model.

| General Information | |
|---|---|
| Series | ELH |
| Dielectric | Aluminum Electrolytic |
| Description | Snap-In, Aluminum Electrolytic |
| RoHS | Yes |
| Lead | 2 Pin |

| Dimensions | |
|---|---|
| D | 35mm +/-1mm |
| L | 40mm +/-2mm |
| S | 10mm +/-0.5mm |
| LL | 5.8mm +/-1mm |
| F | 2mm +/-0.1mm |

| Packaging Specifications | |
|---|---|
| Packaging | Bulk, Bag |

| Specifications | |
|---|---|
| Capacitance | 1,500 uF |
| Tolerance | 20% |
| Voltage DC | 200 VDC, 250 VDC (Surge) |
| Temperature Range | -25/+85°C |
| Rated Temperature | 85°C |
| Life | 2000 Hrs |
| Dissipation Factor | 15% 120Hz 20C |
| ESR | 0.1327 Ohms (120Hz 20C) |
| Ripple Current | 3.8 Amps (120Hz 85C) |
| Leakage Current | 3 mA (5min 20°C) |

Statements of suitability for certain applications are based on our knowledge of typical operating conditions for such applications, but are not intended to constitute - and we specifically disclaim - any warranty concerning suitability for a specific customer application or use. This Information is intended for use only by customers who have the requisite experience and capability to determine the correct products for their application. Any technical advice inferred from this Information or otherwise provided by us with reference to the use of our products is given gratis, and we assume no obligation or liability for the advice given or results obtained.



© 2006 - 2026 YAGEO