CGP5C101KGYDAA7301

CGP DISC Comm HV, Ceramic, 100 pF, 10%, 2,000 VDC, Y5P, 5 mm

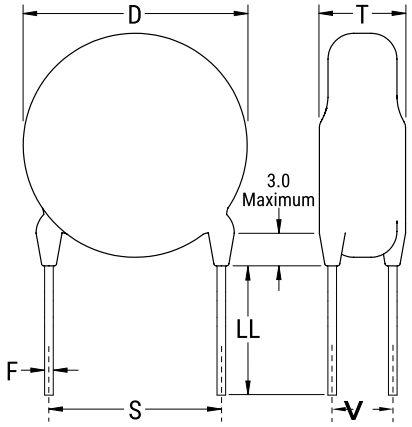

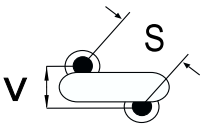

The measurement position of Lead Spacing (S) and Width (V) is critical in straight lead capacitors.

Click here for the 3D model.

General Information	
Series	CGP DISC Comm HV
Style	Radial Disc
RoHS	Yes
Termination	Tin
Failure Rate	N/A
Halogen Free	Yes

Dimensions	
D	6.5mm MAX
T	5mm MAX
S	5mm NOM
LL	20mm +1.5/-1.0mm
F	0.6mm +/-0.1mm
V	1.7mm +/-0.5mm

Specifications	
Capacitance	100 pF
Tolerance	10%
Voltage DC	2000 VDC
Temperature Range	-30/+85°C
Temp. Coefficient	Y5P

Packaging Specifications	
Packaging	T&R
Packaging Quantity	2000

Statements of suitability for certain applications are based on our knowledge of typical operating conditions for such applications, but are not intended to constitute - and we specifically disclaim - any warranty concerning suitability for a specific customer application or use. This Information is intended for use only by customers who have the requisite experience and capability to determine the correct products for their application. Any technical advice inferred from this Information or otherwise provided by us with reference to the use of our products is given gratis, and we assume no obligation or liability for the advice given or results obtained.

© 2006 - 2026 YAGEO