# CDR31BX562AKUR

Aliases (C0805N562K5XRL, CDR31BX562AKZR, CDR31BX562AKWR)

SMD Mil PRF55681, Ceramic, 5,600 pF, 10%, 50 VDC, BX, Ceramic Chips, MIL PRF 55681 Established Reliability, R (0.01%/1000 Hrs), 0805 / 2012

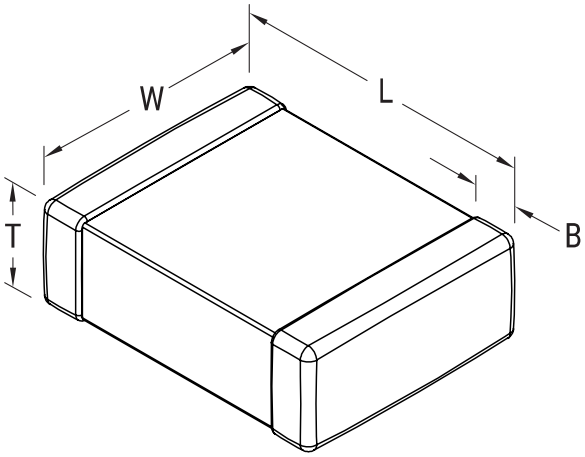


Click here for the 3D model.

| General Information | |
|---|---|
| Series | SMD Mil PRF55681 |
| Style | SMD Chip |
| Description | Ceramic Chips, MIL PRF 55681 Established Reliability |
| RoHS | No |
| Prop 65 | **WARNING:** Cancer and reproductive harm - https://www.p65warnings.ca.gov./ |
| Termination | Lead (SnPb) |
| Failure Rate | R (0.01%/1000 Hrs) |
| Testing and Reliability | MIL-PRF-55681 |
| Qualifications | MIL-PRF-55681 |
| Shelf Life | 78 Weeks |
| MSL | 1 |

| Dimensions | |
|---|---|
| L | 2mm +/-0.20mm |
| W | 1.25mm +/-0.2mm |
| T | 1.3mm MAX |
| B | 0.5mm +/-0.20mm |
| Case Code (EIA / mm) | 0805 / 2012 |

| Packaging Specifications | |
|---|---|
| Packaging | Bulk, Bag |
| Packaging Quantity | 25000 |

| Specifications | |
|---|---|
| Capacitance | 5,600 pF |
| Tolerance | 10% |
| Voltage DC | 50 VDC |
| Dielectric Withstanding Voltage | 125 VDC |
| Temperature Range | -55/+125°C |
| Temp. Coefficient | BX |
| Dissipation Factor | 2.5% |
| Insulation Resistance | 100 GOhms |

Statements of suitability for certain applications are based on our knowledge of typical operating conditions for such applications, but are not intended to constitute - and we specifically disclaim - any warranty concerning suitability for a specific customer application or use. This Information is intended for use only by customers who have the requisite experience and capability to determine the correct products for their application. Any technical advice inferred from this Information or otherwise provided by us with reference to the use of our products is given gratis, and we assume no obligation or liability for the advice given or results obtained.



© 2006 - 2026 YAGEO