CDR31BX183AKUS

Aliases (C0805N183K5XSL, CDR31BX183AKZS, CDR31BX183AKWS)

SMD Mil PRF55681, Ceramic, 0.018 uF, 10%, 50 VDC, BX, Ceramic Chips, MIL PRF 55681 Established Reliability, S (0.001%/1000 Hrs), 0805 / 2012

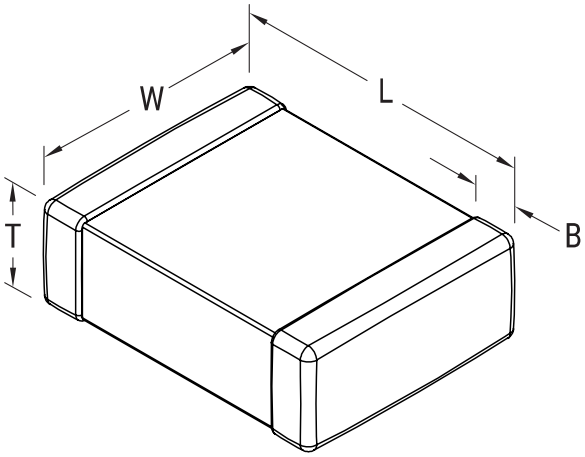

Click here for the 3D model.

General Information	
Series	SMD Mil PRF55681
Style	SMD Chip
Description	Ceramic Chips, MIL PRF 55681 Established Reliability
RoHS	No
Prop 65	**WARNING:** Cancer and reproductive harm - https://www.p65warnings.ca.gov./
Termination	Lead (SnPb)
Failure Rate	S (0.001%/1000 Hrs)
Testing and Reliability	MIL-PRF-55681
Qualifications	MIL-PRF-55681
Shelf Life	78 Weeks
MSL	1

Dimensions	
L	2mm +/-0.20mm
W	1.25mm +/-0.2mm
T	1.3mm MAX
B	0.5mm +/-0.20mm
Case Code (EIA / mm)	0805 / 2012

Packaging Specifications	
Packaging	Bulk, Bag
Packaging Quantity	25000

Specifications	
Capacitance	0.018 uF
Tolerance	10%
Voltage DC	50 VDC
Dielectric Withstanding Voltage	125 VDC
Temperature Range	-55/+125°C
Temp. Coefficient	BX
Dissipation Factor	2.5%
Insulation Resistance	100 GOhms

Statements of suitability for certain applications are based on our knowledge of typical operating conditions for such applications, but are not intended to constitute - and we specifically disclaim - any warranty concerning suitability for a specific customer application or use. This Information is intended for use only by customers who have the requisite experience and capability to determine the correct products for their application. Any technical advice inferred from this Information or otherwise provided by us with reference to the use of our products is given gratis, and we assume no obligation or liability for the advice given or results obtained.

© 2006 - 2026 YAGEO