CBR02C569B5GAC

CBR-SMD RF C0G, Ceramic, 5.6 pF, +/-0.1 pF, 50 VDC, C0G, SMD, Fixed, RF, Ultra High Q, Low ESR, Class I, 0201 / 0603

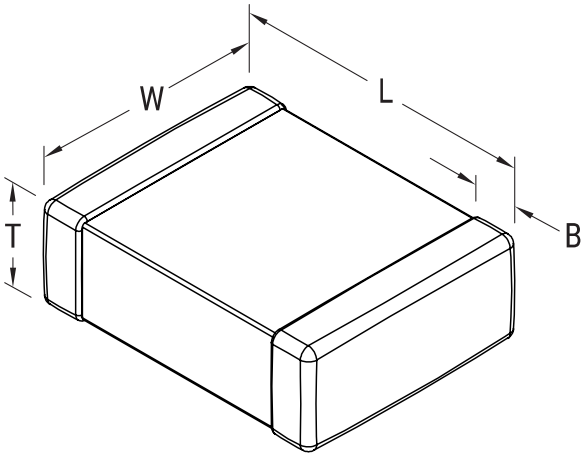

Click here for the 3D model.

General Information	
Series	CBR-SMD RF C0G
Style	SMD Chip
Description	SMD, Fixed, RF, Ultra High Q, Low ESR, Class I
Features	Ultra High Q, Low ESR, Class I
RoHS	Yes
Termination	Tin
Marking	No
Typical Component Weight	0.3 mg
Notes	Solder Reflow Only.
Shelf Life	78 Weeks
MSL	1

Dimensions	
L	0.6mm +/-0.03mm
W	0.3mm +/-0.03mm
T	0.3mm +/-0.03mm
B	0.15mm +/-0.05mm
Case Code (EIA / mm)	0201 / 0603

Packaging Specifications	
Packaging	T&R, 180mm, Plastic Tape
Packaging Quantity	15000

Specifications	
Capacitance	5.6 pF
Tolerance	+/-0.1 pF
Voltage DC	50 VDC
Dielectric Withstanding Voltage	125 VDC
Temperature Range	-55/+125°C
Temp. Coefficient	C0G
Dissipation Factor	0.195%
Aging Rate	0% Loss/Decade Hour
Insulation Resistance	10 GOhms
Quality Factor	512

Statements of suitability for certain applications are based on our knowledge of typical operating conditions for such applications, but are not intended to constitute - and we specifically disclaim - any warranty concerning suitability for a specific customer application or use. This Information is intended for use only by customers who have the requisite experience and capability to determine the correct products for their application. Any technical advice inferred from this Information or otherwise provided by us with reference to the use of our products is given gratis, and we assume no obligation or liability for the advice given or results obtained.

© 2006 - 2026 YAGEO