# CBR02C329B5GAC

CBR-SMD RF C0G, Ceramic, 3.2 pF, +/-0.1 pF, 50 VDC, C0G, SMD, Fixed, RF, Ultra High Q, Low ESR, Class I, 0201 / 0603

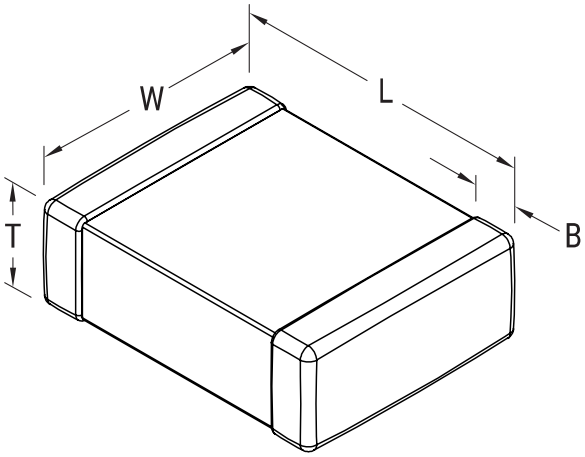


Click here for the 3D model.

| General Information | |
|---|---|
| Series | CBR-SMD RF C0G |
| Style | SMD Chip |
| Description | SMD, Fixed, RF, Ultra High Q, Low ESR, Class I |
| Features | Ultra High Q, Low ESR, Class I |
| RoHS | Yes |
| Termination | Tin |
| Marking | No |
| Typical Component Weight | 0.3 mg |
| Notes | Solder Reflow Only. |
| Shelf Life | 78 Weeks |
| MSL | 1 |

| Dimensions | |
|---|---|
| L | 0.6mm +/-0.03mm |
| W | 0.3mm +/-0.03mm |
| T | 0.3mm +/-0.03mm |
| B | 0.15mm +/-0.05mm |
| Case Code (EIA / mm) | 0201 / 0603 |

| Packaging Specifications | |
|---|---|
| Packaging | T&R, 180mm, Plastic Tape |
| Packaging Quantity | 15000 |

| Specifications | |
|---|---|
| Capacitance | 3.2 pF |
| Tolerance | +/-0.1 pF |
| Voltage DC | 50 VDC |
| Dielectric Withstanding Voltage | 125 VDC |
| Temperature Range | -55/+125°C |
| Temp. Coefficient | C0G |
| Dissipation Factor | 0.216% |
| Aging Rate | 0% Loss/Decade Hour |
| Insulation Resistance | 10 GOhms |
| Quality Factor | 464 |

Statements of suitability for certain applications are based on our knowledge of typical operating conditions for such applications, but are not intended to constitute - and we specifically disclaim - any warranty concerning suitability for a specific customer application or use. This Information is intended for use only by customers who have the requisite experience and capability to determine the correct products for their application. Any technical advice inferred from this Information or otherwise provided by us with reference to the use of our products is given gratis, and we assume no obligation or liability for the advice given or results obtained.



© 2006 - 2026 YAGEO