CAN12X223KARACTU

Aliases (CAN12X223KARAC7800)

CAN SMD Indust 250, Ceramic, 0.022 uF, 10%, 250 VAC, 250 VAC, X7R, SMD Chip, MLCC, AC Rated, 1206 / 3216

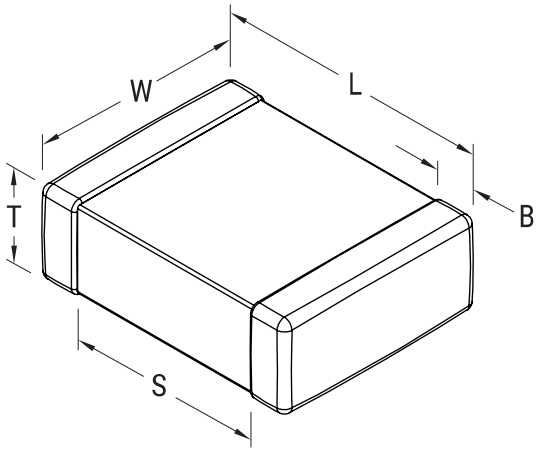

Click here for the 3D model.

General Information	
Series	CAN SMD Indust 250
Style	SMD Chip
Description	SMD Chip, MLCC, AC Rated
Features	Temperature Stable, Class II
RoHS	Yes
Termination	Flexible Termination
Marking	No
Typical Component Weight	55 mg
Shelf Life	78 Weeks
MSL	1

Dimensions	
L	3.3mm +/-0.4mm
W	1.6mm +/-0.35mm
T	1.7mm +/-0.20mm
S	1.5mm MIN
B	0.6mm +/-0.25mm
Case Code (EIA / mm)	1206 / 3216

Packaging Specifications	
Packaging	T&R, 180mm, Plastic Tape
Packaging Quantity	2000

Specifications	
Capacitance	0.022 uF
Measurement Condition	1 kHz 1.0Vrms
Tolerance	10%
Voltage AC	250 VAC
Dielectric Withstanding Voltage	945 VDC
Temperature Range	-55/+125°C
Temp. Coefficient	X7R
Capacitance Change with Reference to +25°C and 0 VDC Applied (TCC)	15%, 1kHz 1.0Vrms
Dissipation Factor	2.5% 1 kHz 1.0Vrms
Aging Rate	3% Loss/Decade Hour: Referee Time is 1000 Hours
Insulation Resistance	4.5455 GOhms

Statements of suitability for certain applications are based on our knowledge of typical operating conditions for such applications, but are not intended to constitute - and we specifically disclaim - any warranty concerning suitability for a specific customer application or use. This Information is intended for use only by customers who have the requisite experience and capability to determine the correct products for their application. Any technical advice inferred from this Information or otherwise provided by us with reference to the use of our products is given gratis, and we assume no obligation or liability for the advice given or results obtained.

© 2006 - 2026 YAGEO