C440C105M5U5TA7200

AxiMax 400 Comm Z5U, Ceramic, 1 uF, 20%, 50 VDC, Z5U, AxiMax, Commercial Standard

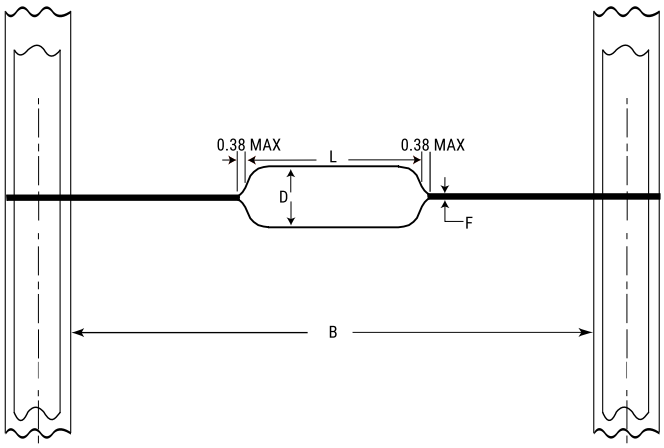

Click here for the 3D model.

General Information	
Series	AxiMax 400 Comm Z5U
Description	AxiMax, Commercial Standard
RoHS	Yes
Termination	Tin
Halogen Free	Yes

Dimensions	
D	3.81mm MAX
L	6.6mm MAX
F	0.51mm +0.025/-0.076mm
B	52.4mm +/-1.5mm

Packaging Specifications	
Packaging	T&R, 305mm
Packaging Quantity	2500

Specifications	
Capacitance	1 uF
Measurement Condition	1 kHz 1.0Vrms
Tolerance	20%
Voltage DC	50 VDC
Dielectric Withstanding Voltage	125 VDC
Temperature Range	+10/+85°C
Temp. Coefficient	Z5U
Capacitance Change with Reference to +25°C and 0 VDC Applied (TCC)	+22%/-56%, 1kHz 1.0Vrms
Dissipation Factor	4% 1 kHz 1.0Vrms
Aging Rate	7% Loss/Decade Hour
Insulation Resistance	100 MOhms

Statements of suitability for certain applications are based on our knowledge of typical operating conditions for such applications, but are not intended to constitute - and we specifically disclaim - any warranty concerning suitability for a specific customer application or use. This Information is intended for use only by customers who have the requisite experience and capability to determine the correct products for their application. Any technical advice inferred from this Information or otherwise provided by us with reference to the use of our products is given gratis, and we assume no obligation or liability for the advice given or results obtained.

© 2006 - 2026 YAGEO