C320C223K1R5TA

GoldMax 300 Comm X7R, Ceramic, 0.022 uF, 10%, 100 VDC, X7R, GoldMax, Commercial Standard, 2.54 mm

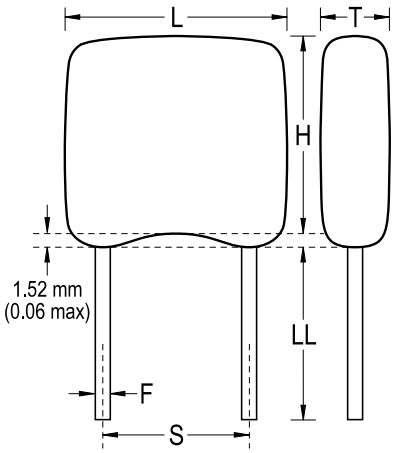

Click here for the 3D model.

General Information	
Series	GoldMax 300 Comm X7R
Style	Radial
Description	GoldMax, Commercial Standard
RoHS	Yes
Termination	Tin
Failure Rate	N/A
Halogen Free	Yes

Dimensions	
L	5.08mm MAX
H	5.84mm MAX
T	3.18mm MAX
S	2.54mm +/-0.78mm
LL	7mm MIN
F	0.51mm +0.1/-0.025mm

Packaging Specifications	
Packaging	Bulk, Bag
Packaging Quantity	500

Specifications	
Capacitance	0.022 uF
Measurement Condition	1 kHz 1.0Vrms
Tolerance	10%
Voltage DC	100 VDC
Dielectric Withstanding Voltage	250 VDC
Temperature Range	-55/+125°C
Temp. Coefficient	X7R
Capacitance Change with Reference to +25°C and 0 VDC Applied (TCC)	0.15, 1kHz 1.0Vrms
Dissipation Factor	2.5% 1 kHz 1.0Vrms
Aging Rate	3% Loss/Decade Hour
Insulation Resistance	45.45 GOhms

Statements of suitability for certain applications are based on our knowledge of typical operating conditions for such applications, but are not intended to constitute - and we specifically disclaim - any warranty concerning suitability for a specific customer application or use. This Information is intended for use only by customers who have the requisite experience and capability to determine the correct products for their application. Any technical advice inferred from this Information or otherwise provided by us with reference to the use of our products is given gratis, and we assume no obligation or liability for the advice given or results obtained.

© 2006 - 2026 YAGEO