C320C105K5N5TA9170

GoldMax 300 Auto X8L HT150C, Ceramic, 1 uF, 10%, 50 VDC, X8L, Goldmax, Automotive Grade, 2.54 mm

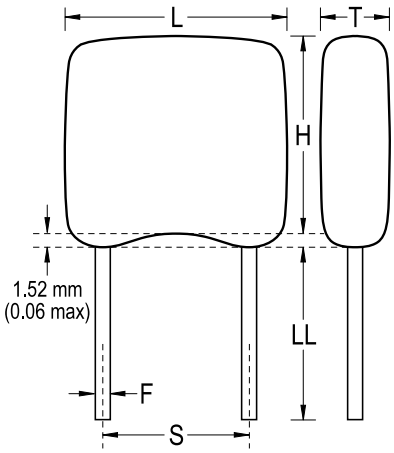

Click here for the 3D model.

General Information	
Series	GoldMax 300 Auto X8L HT150C
Style	Radial
Description	Goldmax, Automotive Grade
Features	Automotive Grade
RoHS	Yes
Termination	Tin
Failure Rate	N/A
Qualifications	AEC-Q200
Halogen Free	Yes

Dimensions	
L	5.08mm MAX
H	5.84mm MAX
T	3.18mm MAX
S	2.54mm +/-0.78mm
LL	7mm MIN
F	0.51mm +0.1/-0.025mm

Packaging Specifications	
Packaging	Bulk, Bag
Packaging Quantity	500

Specifications	
Capacitance	1 uF
Measurement Condition	1 kHz 1.0Vrms
Tolerance	10%
Voltage DC	50 VDC
Dielectric Withstanding Voltage	125 VDC
Temperature Range	-55/+150°C
Temp. Coefficient	X8L
Capacitance Change with Reference to +25°C and 0 VDC Applied (TCC)	15% (-55C to +125C), +15/-40% (125C to 150C), 1kHz 1.0Vrms
Dissipation Factor	2.5% 1 kHz 1.0Vrms
Aging Rate	3% Loss/Decade Hour
Insulation Resistance	1 GOhms

Statements of suitability for certain applications are based on our knowledge of typical operating conditions for such applications, but are not intended to constitute - and we specifically disclaim - any warranty concerning suitability for a specific customer application or use. This Information is intended for use only by customers who have the requisite experience and capability to determine the correct products for their application. Any technical advice inferred from this Information or otherwise provided by us with reference to the use of our products is given gratis, and we assume no obligation or liability for the advice given or results obtained.

© 2006 - 2026 YAGEO