C0805X102K5RAC3316

SMD Auto X7R VW80808, Ceramic, 1,000 pF, 10%, 50 VDC, X7R, SMD, MLCC, Automotive Grade, 0805 / 2012

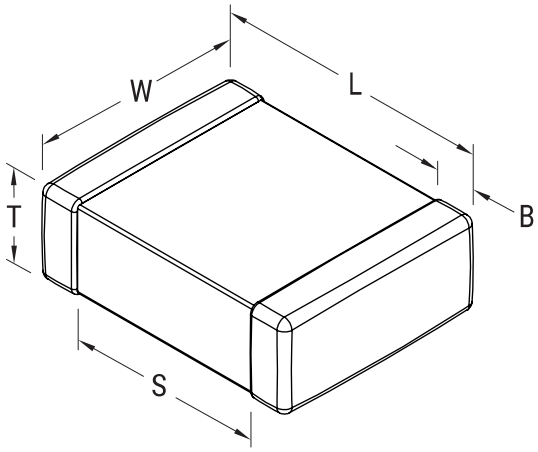

Click here for the 3D model.

General Information	
Series	SMD Auto X7R VW80808
Style	SMD Chip
Description	SMD, MLCC, Automotive Grade
Features	VW 80808 Specification Compliant
RoHS	Yes
Termination	Flexible Termination
Failure Rate	N/A
Qualifications	AEC-Q200
Typical Component Weight	13 mg
Shelf Life	152 Weeks

Dimensions	
L	2mm +/-0.3mm
W	1.25mm +/-0.3mm
T	0.78mm +/-0.20mm
S	0.7mm MIN
B	0.5mm +/-0.25mm
Case Code (EIA / mm)	0805 / 2012

Packaging Specifications	
Packaging	T&R, 180mm, Plastic Tape
Packaging Quantity	4000

Specifications	
Capacitance	1,000 pF
Tolerance	10%
Voltage DC	50 VDC
Dielectric Withstanding Voltage	125 VDC
Temperature Range	-55/+125°C
Temp. Coefficient	X7R
Capacitance Change with Reference to +25°C and 0 VDC Applied (TCC)	15%, 1kHz 1.0Vrms
Dissipation Factor	2.5% 1 kHz 1.0Vrms
Insulation Resistance	100 GOhms

Statements of suitability for certain applications are based on our knowledge of typical operating conditions for such applications, but are not intended to constitute - and we specifically disclaim - any warranty concerning suitability for a specific customer application or use. This Information is intended for use only by customers who have the requisite experience and capability to determine the correct products for their application. Any technical advice inferred from this Information or otherwise provided by us with reference to the use of our products is given gratis, and we assume no obligation or liability for the advice given or results obtained.

© 2006 - 2026 YAGEO