C0805C821JDGACAUTO

SMD Auto C0G HV, Ceramic, 820 pF, 5%, 1,000 VDC, C0G, SMD, MLCC, Ultra-Stable, Low Loss, High Voltage, Automotive Grade, 0805 / 2012

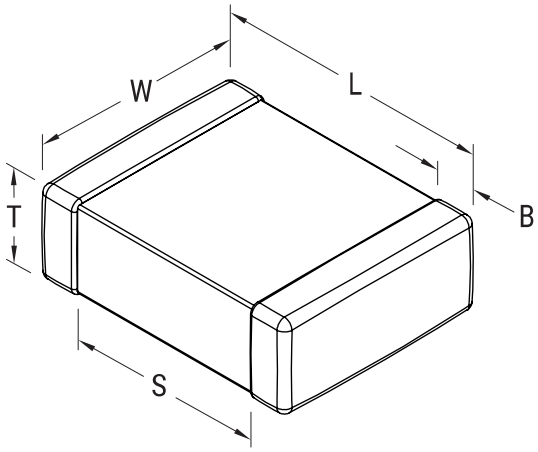

Click here for the 3D model.

General Information	
Series	SMD Auto C0G HV
Style	SMD Chip
Description	SMD, MLCC, Ultra-Stable, Low Loss, High Voltage, Automotive Grade
Features	Ultra-Stable, Low Loss, Automotive Grade
RoHS	Yes
Termination	Tin
Marking	No
Qualifications	AEC-Q200
Typical Component Weight	14 mg
Shelf Life	78 Weeks
MSL	1

Dimensions	
L	2mm +/-0.2mm
W	1.25mm +/-0.2mm
T	1.25mm +/-0.15mm
S	0.7mm MIN
B	0.5mm +/-0.25mm
Case Code (EIA / mm)	0805 / 2012

Packaging Specifications	
Packaging	T&R, 180mm, Plastic Tape
Packaging Quantity	2500

Specifications	
Capacitance	820 pF
Measurement Condition	1 MHz 1.0Vrms
Tolerance	5%
Voltage DC	1000 VDC
Dielectric Withstanding Voltage	1,200 VDC
Temperature Range	-55/+125°C
Temp. Coefficient	C0G
Capacitance Change with Reference to +25°C and 0 VDC Applied (TCC)	30 ppm/C, 1MegaHz 1.0Vrms
Dissipation Factor	0.1% 1 MHz 1.0Vrms
Aging Rate	0% Loss/Decade Hour
Insulation Resistance	100 GOhms

Statements of suitability for certain applications are based on our knowledge of typical operating conditions for such applications, but are not intended to constitute - and we specifically disclaim - any warranty concerning suitability for a specific customer application or use. This Information is intended for use only by customers who have the requisite experience and capability to determine the correct products for their application. Any technical advice inferred from this Information or otherwise provided by us with reference to the use of our products is given gratis, and we assume no obligation or liability for the advice given or results obtained.

© 2006 - 2026 YAGEO