C0805C102K2RALTM

Aliases (C0805C102K2RAL7025)

SMD Comm X7R SnPb, Ceramic, 1,000 pF, 10%, 200 VDC, X7R, SMD, MLCC, Temperature Stable, SnPb Termination, 0805 / 2012

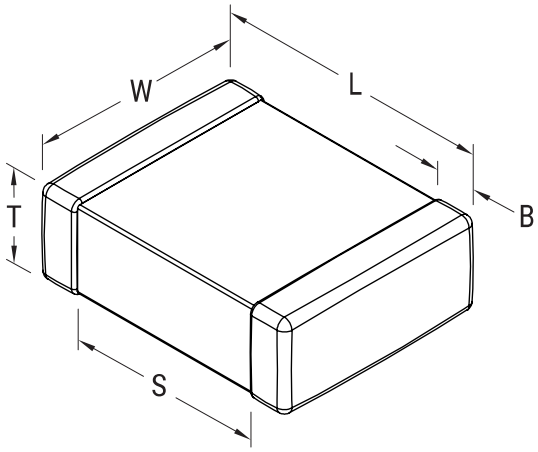

Click here for the 3D model.

General Information	
Series	SMD Comm X7R SnPb
Style	SMD Chip
Description	SMD, MLCC, Temperature Stable, SnPb Termination
Features	SnPb Termination
RoHS	No
Prop 65	**WARNING:** Cancer and reproductive harm - https://www.p65warnings.ca.gov./
SCIP Number	5549986b-60cf-4a2a-afbb-4ad1d7a11dcb
Termination	Lead (SnPb)
Marking	Yes
Typical Component Weight	11 mg
Shelf Life	78 Weeks
MSL	1

Dimensions	
L	2mm +/-0.2mm
W	1.25mm +/-0.2mm
T	0.78mm +/-0.10mm
S	0.7mm MIN
B	0.5mm +/-0.25mm
Case Code (EIA / mm)	0805 / 2012

Packaging Specifications	
Packaging	T&R, 180mm, Paper Tape
Packaging Quantity	4000

Specifications	
Capacitance	1,000 pF
Measurement Condition	1 kHz 1.0Vrms
Tolerance	10%
Voltage DC	200 VDC
Dielectric Withstanding Voltage	500 VDC
Temperature Range	-55/+125°C
Temp. Coefficient	X7R
Capacitance Change with Reference to +25°C and 0 VDC Applied (TCC)	15%, 1kHz 1.0Vrms
Dissipation Factor	2.5% 1 kHz 1.0Vrms
Aging Rate	3% Loss/Decade Hour: Referee Time is 1000 Hours
Insulation Resistance	100 GOhms

Statements of suitability for certain applications are based on our knowledge of typical operating conditions for such applications, but are not intended to constitute - and we specifically disclaim - any warranty concerning suitability for a specific customer application or use. This Information is intended for use only by customers who have the requisite experience and capability to determine the correct products for their application. Any technical advice inferred from this Information or otherwise provided by us with reference to the use of our products is given gratis, and we assume no obligation or liability for the advice given or results obtained.

© 2006 - 2026 YAGEO