# C0603F562K8RACTU

Aliases (C0603F562K8RAC7867)

SMD Comm X7R FO, Ceramic, 5,600 pF, 10%, 10 VDC, X7R, SMD, MLCC, Open Mode, Temperature Stable, 0603 / 1608

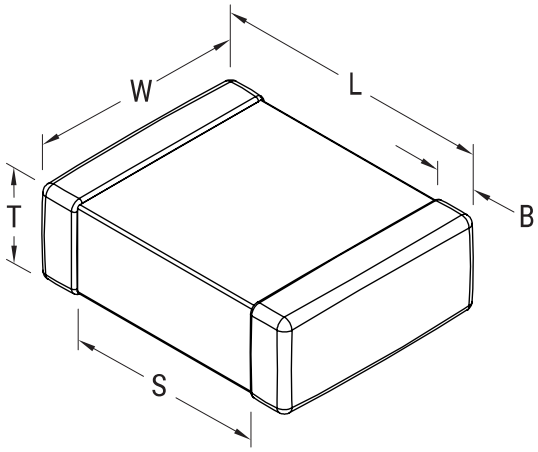


Click here for the 3D model.

| General Information | |
|---|---|
| Series | SMD Comm X7R FO |
| Style | SMD Chip |
| Description | SMD, MLCC, Open Mode, Temperature Stable |
| Features | Open Mode, Temperature Stable |
| RoHS | Yes |
| Termination | Tin |
| Marking | No |
| Typical Component Weight | 7.3 mg |
| Shelf Life | 78 Weeks |
| MSL | 1 |

| Dimensions | |
|---|---|
| L | 1.6mm +/-0.15mm |
| W | 0.8mm +/-0.15mm |
| T | 0.8mm +/-0.15mm |
| S | 0.5mm MIN |
| B | 0.35mm +/-0.15mm |
| Case Code (EIA / mm) | 0603 / 1608 |

| Packaging Specifications | |
|---|---|
| Packaging | T&R, 180mm, Paper Tape |
| Packaging Quantity | 4000 |

| Specifications | |
|---|---|
| Capacitance | 5,600 pF |
| Measurement Condition | 1 kHz 1.0Vrms |
| Tolerance | 10% |
| Voltage DC | 10 VDC |
| Dielectric Withstanding Voltage | 25 VDC |
| Temperature Range | -55/+125°C |
| Temp. Coefficient | X7R |
| Capacitance Change with Reference to +25°C and 0 VDC Applied (TCC) | 15% |
| Dissipation Factor | 5% 1 kHz 1.0Vrms |
| Aging Rate | 3% Loss/Decade Hour: Referee Time is 1000 Hours |
| Insulation Resistance | 100 GOhms |

Statements of suitability for certain applications are based on our knowledge of typical operating conditions for such applications, but are not intended to constitute - and we specifically disclaim - any warranty concerning suitability for a specific customer application or use. This Information is intended for use only by customers who have the requisite experience and capability to determine the correct products for their application. Any technical advice inferred from this Information or otherwise provided by us with reference to the use of our products is given gratis, and we assume no obligation or liability for the advice given or results obtained.



© 2006 - 2026 YAGEO