C0603F273M8RACTU

Aliases (C0603F273M8RAC7867)

SMD Comm X7R FO, Ceramic, 0.027 uF, 20%, 10 VDC, X7R, SMD, MLCC, Open Mode, Temperature Stable, 0603 / 1608

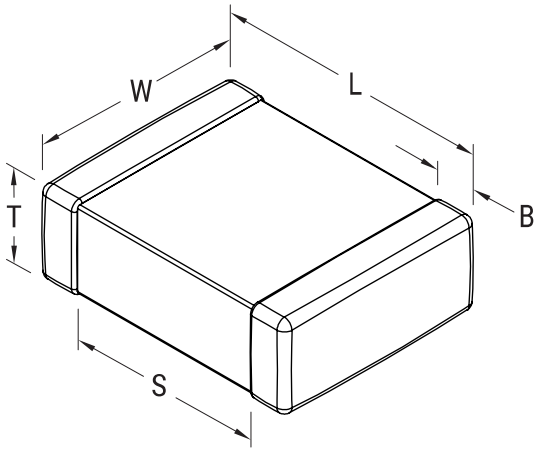

Click here for the 3D model.

General Information	
Series	SMD Comm X7R FO
Style	SMD Chip
Description	SMD, MLCC, Open Mode, Temperature Stable
Features	Open Mode, Temperature Stable
RoHS	Yes
Termination	Tin
Marking	No
Typical Component Weight	7.3 mg
Shelf Life	78 Weeks
MSL	1

Dimensions	
L	1.6mm +/-0.15mm
W	0.8mm +/-0.15mm
T	0.8mm +/-0.15mm
S	0.5mm MIN
B	0.35mm +/-0.15mm
Case Code (EIA / mm)	0603 / 1608

Packaging Specifications	
Packaging	T&R, 180mm, Paper Tape
Packaging Quantity	4000

Specifications	
Capacitance	0.027 uF
Measurement Condition	1 kHz 1.0Vrms
Tolerance	20%
Voltage DC	10 VDC
Dielectric Withstanding Voltage	25 VDC
Temperature Range	-55/+125°C
Temp. Coefficient	X7R
Capacitance Change with Reference to +25°C and 0 VDC Applied (TCC)	15%
Dissipation Factor	5% 1 kHz 1.0Vrms
Aging Rate	3% Loss/Decade Hour: Referee Time is 1000 Hours
Insulation Resistance	37.037 GOhms

Statements of suitability for certain applications are based on our knowledge of typical operating conditions for such applications, but are not intended to constitute - and we specifically disclaim - any warranty concerning suitability for a specific customer application or use. This Information is intended for use only by customers who have the requisite experience and capability to determine the correct products for their application. Any technical advice inferred from this Information or otherwise provided by us with reference to the use of our products is given gratis, and we assume no obligation or liability for the advice given or results obtained.

© 2006 - 2026 YAGEO