C/CT-0306

Aliases (USEX0306000000)

KEMET, C/CT-0306, Current, Round - Snap-on, AC Current, High Performance, Compact, Slim, Flame Retardant

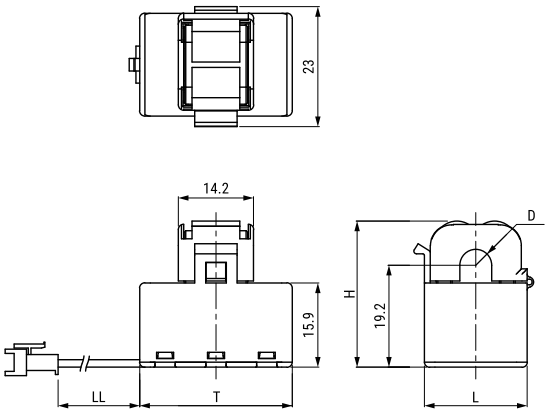

Click here for the 3D model.

General Information	
Series	C/CT-0306
Type	Current
Style	Round - Snap-on
Description	High Alternating Current Sensor
Features	High Performance, Compact, Slim, Flame Retardant
Lead	Cable Connector
RoHS	Yes
REACH	Yes

Dimensions	
D	6mm
L	28.8mm
H	28.3mm
T	19.4mm
LL	140mm +/-10mm

Packaging Specifications	
Packaging	Tray
Packaging Quantity	144
Typical Component Weight	23.7 g

Specifications	
Temperature Range	-10/+60°C
Voltage DC	100 mV (Output, +/- 8 mV), 7.5 V (Output Protection)
Insulation Resistance	100 MOhms (At 500 VDC, between core and terminal)
Current	30 Amps (50Hz/60Hz)
Miscellaneous	Current Transformation Ratio = 3,000. Insulation Resistance = 500 VDC To 100 MOhms. Storage Temperature = -20/ +75C.

Statements of suitability for certain applications are based on our knowledge of typical operating conditions for such applications, but are not intended to constitute - and we specifically disclaim - any warranty concerning suitability for a specific customer application or use. This Information is intended for use only by customers who have the requisite experience and capability to determine the correct products for their application. Any technical advice inferred from this Information or otherwise provided by us with reference to the use of our products is given gratis, and we assume no obligation or liability for the advice given or results obtained.

© 2006 - 2026 YAGEO