ALS60A222NJ550

Not for New Design

ALS60, Aluminum Electrolytic, 2,200 uF, 20%, 550 VDC, -40/+85°C, 31.8 mm

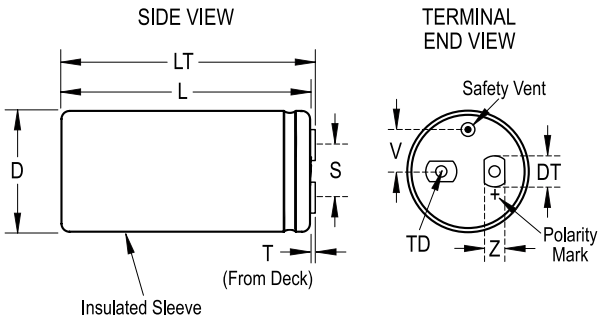

General Information	
Series	ALS60
Dielectric	Aluminum Electrolytic
Description	High Voltage, Screw Terminal, Aluminum Electrolytic
Features	High Voltage
RoHS	Yes
Mounting	Through-Hole
Typical Component Weight	765 g
Notes	Dimensions D And L Include Sleeving. MS (MxH) = M12x16.

Click here for the 3D model.

Dimensions	
D	77mm +/-1mm
L	115mm +/-2mm
T	5.5mm +/-0.5mm
S	31.8mm +/-0.5mm
DT	13mm +/-0.5mm
LT	119mm +/-1mm
TD	10mm MIN
V	19mm NOM
Z	10mm NOM

Packaging Specifications	
Sleeving	Yes
Packaging	Bulk, Box

Specifications	
Capacitance	2,200 uF
Tolerance	20%
Voltage DC	550 VDC, 605 VDC (Surge)
Temperature Range	-40/+85°C
Rated Temperature	85°C
Life	20000 Hrs
ESR	137.4 mOhms (100Hz 20C), 121.4 mOhms (10kHz 20C)
Ripple Current	11.65 Amps (100Hz 85C), 17.53 Amps (10kHz 85C)
Leakage Current	6000 uA (5min 20°C)

Statements of suitability for certain applications are based on our knowledge of typical operating conditions for such applications, but are not intended to constitute - and we specifically disclaim - any warranty concerning suitability for a specific customer application or use. This Information is intended for use only by customers who have the requisite experience and capability to determine the correct products for their application. Any technical advice inferred from this Information or otherwise provided by us with reference to the use of our products is given gratis, and we assume no obligation or liability for the advice given or results obtained.

© 2006 - 2026 YAGEO