# ALS60A182MM550

Not for New Design

ALS60, Aluminum Electrolytic, 1,800 uF, 20%, 550 VDC, -40/+85°C, 28.5 mm

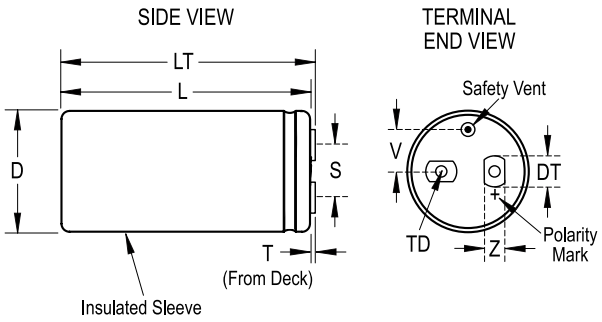


| General Information | |
|---|---|
| Series | ALS60 |
| Dielectric | Aluminum Electrolytic |
| Description | High Voltage, Screw Terminal, Aluminum Electrolytic |
| Features | High Voltage |
| RoHS | Yes |
| Mounting | Through-Hole |
| Typical Component Weight | 610 g |
| Notes | Dimensions D And L Include Sleeving. MS (MxH) = M12x16. |

Click here for the 3D model.

| Dimensions | |
|---|---|
| D | 66mm +/-1mm |
| L | 131mm +/-2mm |
| T | 5.5mm +/-0.5mm |
| S | 28.5mm +/-0.5mm |
| DT | 13mm +/-0.5mm |
| LT | 135mm +/-1mm |
| TD | 10mm MIN |
| V | 15.8mm NOM |
| Z | 10mm NOM |

| Packaging Specifications | |
|---|---|
| Sleeving | Yes |
| Packaging | Bulk, Box |

| Specifications | |
|---|---|
| Capacitance | 1,800 uF |
| Tolerance | 20% |
| Voltage DC | 550 VDC, 605 VDC (Surge) |
| Temperature Range | -40/+85°C |
| Rated Temperature | 85°C |
| Life | 19000 Hrs |
| ESR | 170.9 mOhms (100Hz 20C), 151.4 mOhms (10kHz 20C) |
| Ripple Current | 10.16 Amps (100Hz 85C), 15.62 Amps (10kHz 85C) |
| Leakage Current | 5940 uA (5min 20°C) |

Statements of suitability for certain applications are based on our knowledge of typical operating conditions for such applications, but are not intended to constitute - and we specifically disclaim - any warranty concerning suitability for a specific customer application or use. This Information is intended for use only by customers who have the requisite experience and capability to determine the correct products for their application. Any technical advice inferred from this Information or otherwise provided by us with reference to the use of our products is given gratis, and we assume no obligation or liability for the advice given or results obtained.



© 2006 - 2026 YAGEO