ALS36H333L4C075

Not for New Design

ALS36, Aluminum Electrolytic, 33,000 uF, -10/+30%, 75 VDC, -40/+85°C, 28.58 mm

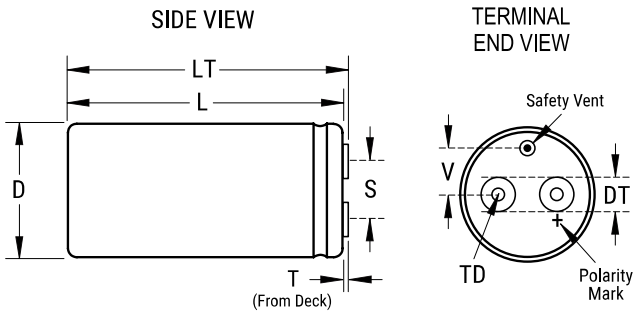

General Information	
Series	ALS36
Dielectric	Aluminum Electrolytic
Description	Screw Terminal, Aluminum Electrolytic
RoHS	Yes
Mounting	Through-Hole
Typical Component Weight	485 g
Notes	Add 0.015 in/ 0.4 mm to D and 0.045 in/ 1.1 mm to L for Sleeving. Dimension LT Available On Request. MS (MxH) = M12x16. Mounting Clamp (Sold Separately): V8
Shelf Life	156 Weeks

Click here for the 3D model.

Dimensions	
D	63.5mm +/-0.787mm
L	104.775mm +/-1.575mm
T	7.137mm +/-0.787mm
S	28.575mm +/-0.483mm
DT	8.001mm +/-0.483mm
TD	10.008mm MIN
V	15.799mm NOM

Packaging Specifications	
Packaging	Bulk, Box

Specifications	
Capacitance	33,000 uF
Tolerance	-10/+30%
Voltage DC	75 VDC, 95 VDC (Surge)
Temperature Range	-40/+85°C
Rated Temperature	85°C
Life	19000 Hrs (Rated Voltage And Ripple Current At 85C), 38000 Hrs (Rated Voltage at 85C)
ESR	11 mOhms (120Hz 25C), 10 mOhms (20kHz 25C)
Ripple Current	21.6 Amps (120Hz 85C), 23.3 Amps (20kHz 85C)
Leakage Current	6000 uA (5min 20°C)

Statements of suitability for certain applications are based on our knowledge of typical operating conditions for such applications, but are not intended to constitute - and we specifically disclaim - any warranty concerning suitability for a specific customer application or use. This Information is intended for use only by customers who have the requisite experience and capability to determine the correct products for their application. Any technical advice inferred from this Information or otherwise provided by us with reference to the use of our products is given gratis, and we assume no obligation or liability for the advice given or results obtained.

© 2006 - 2026 YAGEO