ALS32A822N5R350

Not for New Design

ALS32, Aluminum Electrolytic, 8,200 uF, 20%, 350 VDC, -40/+85°C, 31.8 mm

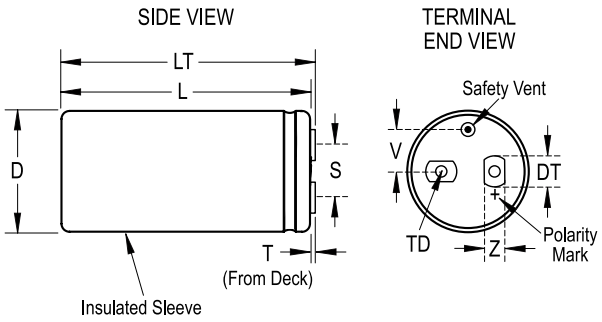

Click here for the 3D model.

General Information	
Series	ALS32
Dielectric	Aluminum Electrolytic
Description	Screw Terminal, Aluminum Electrolytic
RoHS	Yes
Mounting	Through-Hole
Typical Component Weight	990 g
Notes	Add 0.4mm To D (1.1mm When D = 88.9) And 1.1mm To L For Sleeving. MS (MxH) = M12x16. Mounting Clamp (Sold Separately): V11
Shelf Life	156 Weeks

Dimensions	
D	76.2mm +/-0.8mm
L	149.2mm +/-1.6mm
T	5.5mm +/-0.5mm
S	31.8mm +/-0.5mm
DT	13mm +/-0.5mm
LT	154mm +/-1mm
TD	10mm MIN
V	19mm NOM
Z	10mm NOM

Packaging Specifications	
Packaging	Bulk, Box

Specifications	
Capacitance	8,200 uF
Tolerance	20%
Voltage DC	350 VDC, 385 VDC (Surge)
Temperature Range	-40/+85°C
Rated Temperature	85°C
Life	20000 Hrs (Rated Voltage And Ripple Current At 85C), 40000 Hrs (Rated Voltage At 85C)
ESR	24 mOhms (120Hz 25C), 18 mOhms (20kHz 25C)
Ripple Current	19.9 Amps (120Hz 85C), 25.5 Amps (20kHz 85C)
Leakage Current	6000 uA (5min 20°C)

Statements of suitability for certain applications are based on our knowledge of typical operating conditions for such applications, but are not intended to constitute - and we specifically disclaim - any warranty concerning suitability for a specific customer application or use. This Information is intended for use only by customers who have the requisite experience and capability to determine the correct products for their application. Any technical advice inferred from this Information or otherwise provided by us with reference to the use of our products is given gratis, and we assume no obligation or liability for the advice given or results obtained.

© 2006 - 2026 YAGEO