ALS30A102KE400

ALS30, Aluminum Electrolytic, 1,000 uF, 20%, 400 VDC, -40/+85°C, 22.2 mm

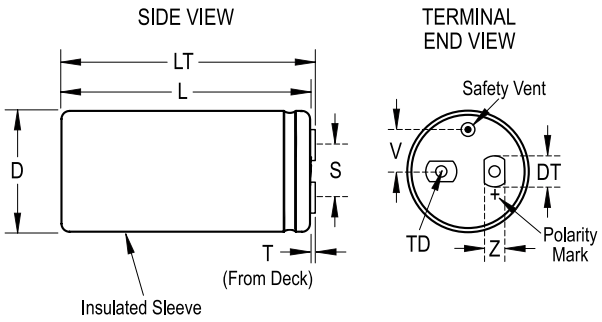

General Information	
Series	ALS30
Dielectric	Aluminum Electrolytic
Description	Screw Terminal, Aluminum Electrolytic
RoHS	Yes
Mounting	Through-Hole
Typical Component Weight	220 g
Notes	Dimensions D And L Include Sleeving. MS (MxH) = M12x16. Mounting Clamp (Sold Separately): V4/2737
Shelf Life	156 Weeks

Click here for the 3D model.

Dimensions	
D	51mm +/-1mm
L	82mm +/-2mm
T	5.5mm +/-0.5mm
S	22.2mm +/-0.5mm
DT	13mm +/-0.5mm
LT	86.5mm +/-1mm
TD	10mm MIN
V	13.7mm NOM
Z	10mm NOM

Packaging Specifications	
Sleeving	Yes
Packaging	Bulk, Box

Specifications	
Capacitance	1,000 uF
Tolerance	20%
Voltage DC	400 VDC, 440 VDC (Surge)
Temperature Range	-40/+85°C
Rated Temperature	85°C
Life	18000 Hrs (Rated Voltage And Ripple Current At 85C), 36000 Hrs (Rated Voltage At 85C)
ESR	139 mOhms (100Hz 20C), 98 mOhms (10kHz 20C)
Ripple Current	5.8 Amps (100Hz 85C), 10.3 Amps (10kHz 85C)
Leakage Current	2400 uA (5min 20°C)

Statements of suitability for certain applications are based on our knowledge of typical operating conditions for such applications, but are not intended to constitute - and we specifically disclaim - any warranty concerning suitability for a specific customer application or use. This Information is intended for use only by customers who have the requisite experience and capability to determine the correct products for their application. Any technical advice inferred from this Information or otherwise provided by us with reference to the use of our products is given gratis, and we assume no obligation or liability for the advice given or results obtained.

© 2006 - 2026 YAGEO