ALP22A472BB063

Not for New Design

ALP22, Aluminum Electrolytic, 4,700 uF, 20%, 63 VDC, -40/+85°C, 7.5 mm

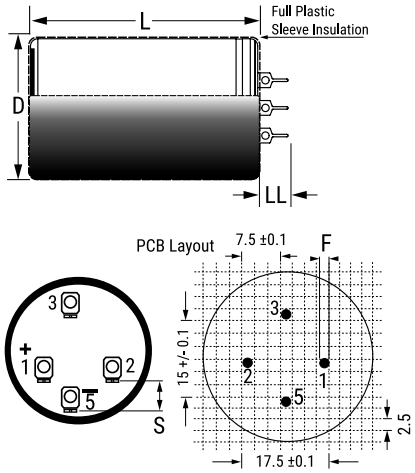

Click here for the 3D model.

General Information	
Series	ALP22
Dielectric	Aluminum Electrolytic
Description	Solder Pin, Aluminum Electrolytic
Features	Solder Pin
RoHS	Yes
Lead	4 Pin Solder
Typical Component Weight	34.7 g
Notes	Dimensions D And L Include Sleeving.

Dimensions	
D	30mm +/-1mm
L	45mm +/-2mm
S	7.5mm +/-0.1mm
LL	7.5mm +/-0.5mm
F	1.3mm

Packaging Specifications	
Sleeving	Yes
Packaging	Tray

Specifications	
Capacitance	4,700 uF
Tolerance	20%
Voltage DC	63 VDC, 72.45 VDC (Surge)
Temperature Range	-40/+85°C
Rated Temperature	85°C
Life	15000 Hrs
Leakage Current	1777 uA (5min 20°C)

Statements of suitability for certain applications are based on our knowledge of typical operating conditions for such applications, but are not intended to constitute - and we specifically disclaim - any warranty concerning suitability for a specific customer application or use. This Information is intended for use only by customers who have the requisite experience and capability to determine the correct products for their application. Any technical advice inferred from this Information or otherwise provided by us with reference to the use of our products is given gratis, and we assume no obligation or liability for the advice given or results obtained.

© 2006 - 2026 YAGEO