ALH82A750CB600

ALH82, Aluminum Electrolytic, 75 uF, 20%, 600 VDC, -40/+105°C, 10 mm

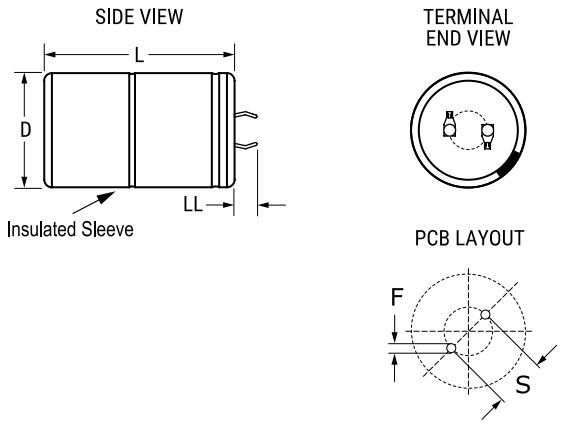

Click here for the 3D model.

General Information	
Series	ALH82
Dielectric	Aluminum Electrolytic
Description	Snap-In, Aluminum Electrolytic
RoHS	Yes
Halogen Free	Yes
Typical Component Weight	40 g
Shelf Life	156 Weeks

Dimensions	
D	30mm +/-1mm
L	30mm +/-2mm
S	10mm +/-0.1mm
LL	6.3mm +/-1mm
F	2mm +/-0.1mm

Packaging Specifications	
Packaging	Tray

Specifications	
Capacitance	75 uF
Tolerance	20%
Voltage DC	600 VDC
Temperature Range	-40/+105°C
Rated Temperature	105°C
Life	3000 Hrs (Rated Voltage And Ripple Current At 105C)
ESR	1861 mOhms (100Hz 20C), 1257 mOhms (10kHz 20C)
Ripple Current	0.97 Amps (100Hz 105C), 2.74 Amps (10Hz 105C)
Leakage Current	135 uA (5min 20°C)

Statements of suitability for certain applications are based on our knowledge of typical operating conditions for such applications, but are not intended to constitute - and we specifically disclaim - any warranty concerning suitability for a specific customer application or use. This Information is intended for use only by customers who have the requisite experience and capability to determine the correct products for their application. Any technical advice inferred from this Information or otherwise provided by us with reference to the use of our products is given gratis, and we assume no obligation or liability for the advice given or results obtained.

© 2006 - 2026 YAGEO