ALF80C132EL400

ALF80, Aluminum Electrolytic, 1,300 uF, 20%, 400 VDC, -40/+105°C, 22.5 mm

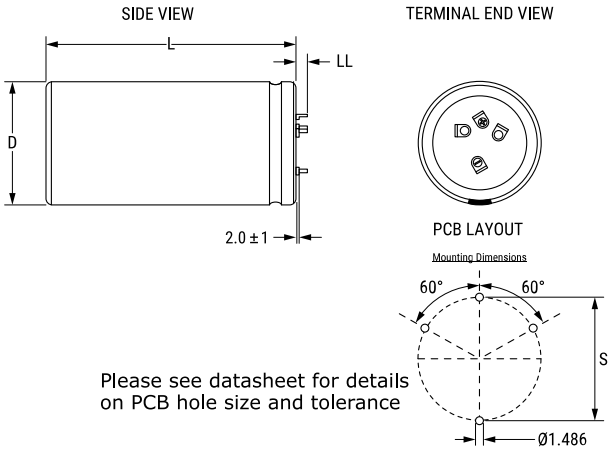

Click here for the 3D model.

General Information	
Series	ALF80
Dielectric	Aluminum Electrolytic
Style	Press-Fit
Description	Aluminum Electrolytic
RoHS	Yes
Lead	4 Pin Press-Fit
Typical Component Weight	165 g
Notes	Dimensions D And L Include Sleeving.
Shelf Life	156 Weeks

Dimensions	
D	40mm +1mm
L	80mm +/-2mm
S	22.5mm +/-0.1mm
LL	5.5mm +/-1mm
F	1.486mm +/-0.076mm

Packaging Specifications	
Sleeving	Yes
Packaging	Bulk

Specifications	
Capacitance	1,300 uF
Tolerance	20%
Voltage DC	400 VDC, 440 VDC (Surge)
Temperature Range	-40/+105°C
Rated Temperature	105°C
Life	9000 Hrs (Rated Voltage And Ripple Current At 105C), 14000 Hrs (Rated Voltage At 105C)
ESR	100.6 mOhms (100Hz 20C), 53.56 mOhms (10kHz 20C)
Ripple Current	5.071 Amps (100Hz 105C), 11.34 Amps (10kHz 105C)
Leakage Current	1560 uA (5min 20°C)

Statements of suitability for certain applications are based on our knowledge of typical operating conditions for such applications, but are not intended to constitute - and we specifically disclaim - any warranty concerning suitability for a specific customer application or use. This Information is intended for use only by customers who have the requisite experience and capability to determine the correct products for their application. Any technical advice inferred from this Information or otherwise provided by us with reference to the use of our products is given gratis, and we assume no obligation or liability for the advice given or results obtained.

© 2006 - 2026 YAGEO